Master a New Router Technique This Weekend

Woodsmith®

www.woodsmith.com

Vol. 29 / No. 170

Shown with Easy-to-Add Doors & Drawers

Router Tricks with Round-over Bits: 2 Bits — 7 Profiles

The Right Rip Blade for Great Glue Joints

5 Simple Shop Storage Solutions

Hassle-Free Plywood Cuts on the Table Saw

Heirloom Bookcases

Turn a Simple Plywood Project into a Showpiece — We'll Show You How

A Publication of August Home Publishing

Table of Contents

from our readers
Tips & Techniques 4

all about
Glue Line Rip Blades 8
A new generation of rip blades delivers smooth, swirl-free cuts — without sacrificing speed.

tools of the trade
Roundover Bits 10
Learn how to make a variety of profiles using nothing more than a couple of roundover bits.

techniques from our shop
Plywood on the Table Saw 12
Here are some shop-tested strategies for handling large sheets of plywood on your table saw.

jigs and fixtures
Low-Cost Veneering 14
This inexpensive vacuum bag system will give you perfect veneering results every time.

tips from our shop
Shop Notebook 32

small shop solutions
5 Simple Shop Organizers 44
Pick up a few handy ways to keep small tools, bits, and accessories within easy reach.

finishing room
Perfect Aerosol Finishes 46
You don't need expensive equipment to get top-notch spray finishes — just the right techniques.

in the mailbox
Q & A 48

hardware and supplies
Sources 49

details of craftsmanship
Techniques for Making Legs 50
Table and desk legs are always on display. Here's how to make them look their best.

Routed Bowls page 16

Classic Modular Bookcase page 22

projects

weekend project

ONLINE EXTRA video workshop

Routed Bowls 16

Create uniquely shaped bowls with your router? You bet. And you'll be surprised at just how fast and easy the technique is. DESIGNER'S NOTEBOOK

heirloom project

Classic Modular Bookcase 22

Start with a basic case. Then expand the design by building additional units and customize them with options to suit your storage needs.

designer series project

Five-Drawer Desk 34

Sure, this elegant-looking desk stands out from the crowd. But you'll appreciate its straightforward construction and skill-building details.

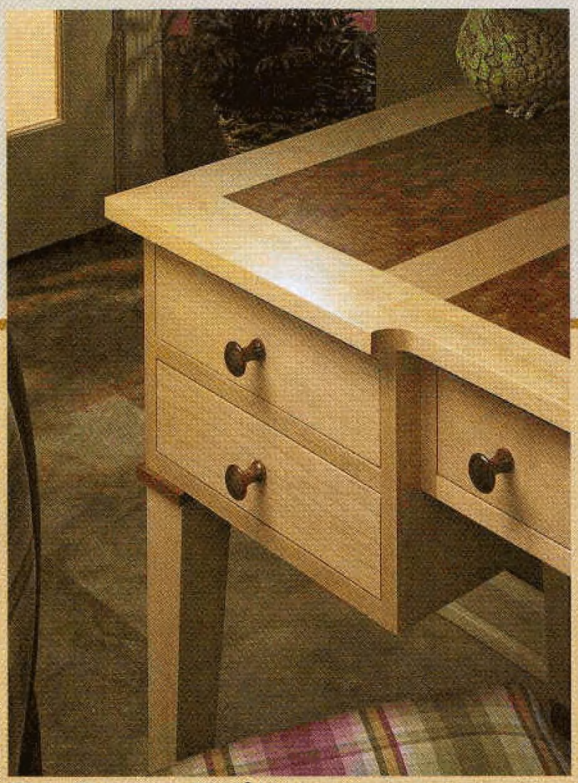

Five-Drawer Desk page 34

editor's note

Sawdust

The feature project in this issue is a classic bookcase. At first glance, it looks like a large, traditional woodworking project. But in this case, looks are a bit deceiving. This isn't one large project, but rather four small cases that simply set together. An easy-to-build, modular design means you can customize this project to meet just about any storage need you might have.

Everything about this project is designed with flexibility in mind. You can start with a single case, screw on a base and top, and you've got an elegant, low bookcase. Need more space? Just stack two cases together. Or put four cases together for an entire wall of storage. Want to add drawers and doors? No problem. They can be easily added at any time, even after the cases are built. For more on how to build this modular bookcase, check out the article that begins on page 22.

The other two projects in this issue are slightly smaller in scale, but just as interesting. First, there's a contemporary, maple and cherry desk. Here again, the project starts with basic plywood box construction. Then the exposed edges are covered with solid wood, but not in the typical manner. To create an "invisible" joint line between the edging and plywood, we came up with a special technique. To learn the secret, see the article on page 34.

Speaking of techniques, be sure to take a look at the bowls on page 16. They may look tricky to make, but there's no turning or carving involved. In fact, all you need to make one is a router and a band saw. And the foolproof technique means you can literally turn out a bowl in a matter of minutes. To see for yourself, go to **www.Woodsmith.com** and visit our Video Workshop.

Terry

ONLINE EXTRA video workshop

Woodsmith GO ONLINE EXTRAS

These two symbols let you know there's more information online at www.Woodsmith.com. There you'll see step-by-step videos, technique and project animation, bonus cutting diagrams, and a lot more.

Tips & Techniques

Shop-Made Router Edge Guide

I like to use an edge guide to rout grooves and dadoes. However, most guides don't have enough reach to rout more than a few inches from the edge. So, I built my own guide to take care of the problem.

The drawing below shows how simple this guide is. The long arm is constructed out of 3/8" plywood, and its width matches the router's base. The arm attaches to a stout fence that will keep it steady during use. All of this combines to provide a lot of stability to the guide.

A jig this size can be a challenge to keep square to the workpiece, so I added a couple of things to help. Detail 'a' below shows how the arm fits snugly between two runners in the fence. Plus, a rectangular guide block fits into the slot to help the guide stay square.

The router is mounted to one end of the arm (remove the router's baseplate first). The arm attaches to the fence with a carriage bolt, washer, and threaded knob through the guide block in the center slot.

Now, I can easily rout straight grooves and dadoes, no matter where they are on the workpiece.

George Person
Costa Mesa, California

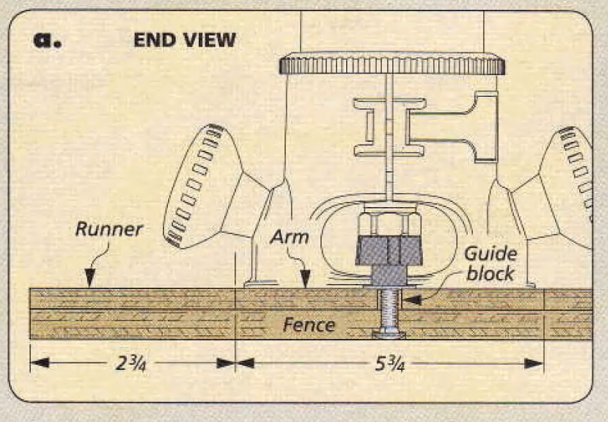

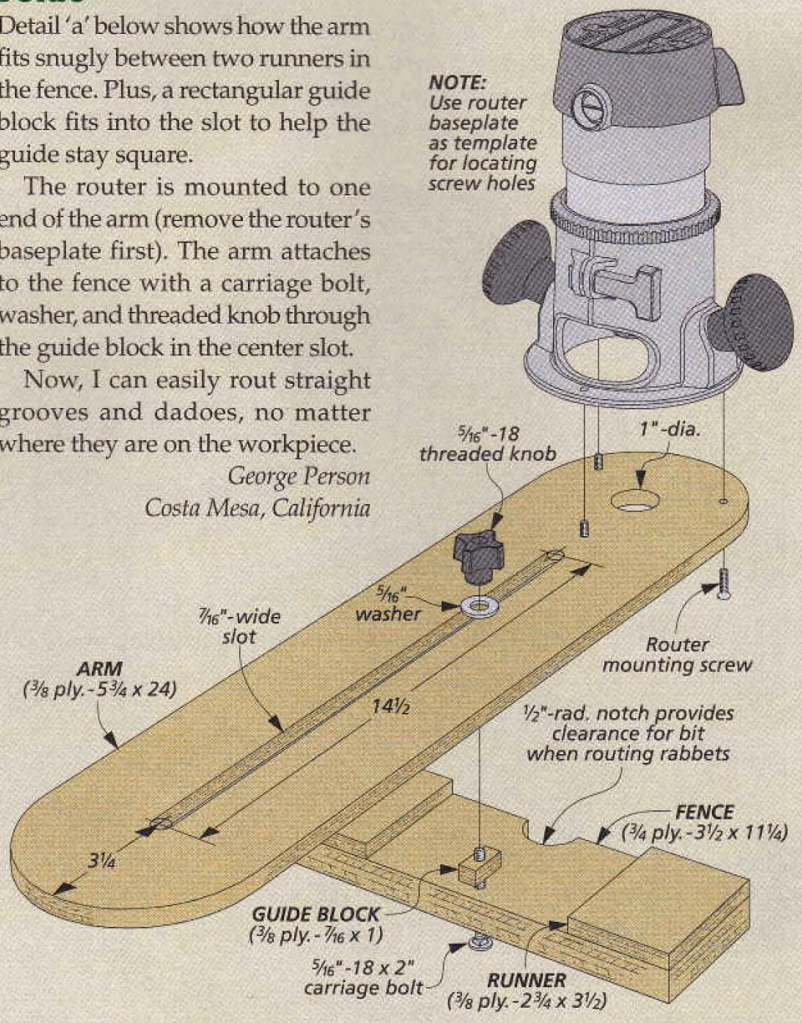

Accurate Miters

After reading about the *Wixey Digital Angle Gauge* in *Woodsmith* No. 168, I bought one and found another use for it — to set the angle of my table saw miter gauge.

SQUARE THE MITER GAUGE. To do this, the *Wixey* first needs a reference point. I clamped one end of the miter gauge firmly to the top of my table saw (any flat surface will do). The head of the miter gauge should be loose enough to move freely.

The *Wixey* comes with a magnet, so it attaches easily to the miter bar. Next, I used a square to adjust the bar perpendicular to the miter fence and zeroed out the digital gauge (top right photo).

SETTING PERFECT ANGLES. After the digital gauge read zero, I slowly moved the bar until the gauge displayed the angle I was looking for (in this case, 45°). When you reach the angle you want, lock the miter gauge, unclamp the fence, and you're ready to cut miters.

By using the *Wixey* gauge and this method to set the angles on my miter gauge, the accuracy and consistency of miter cuts on my table saw has greatly improved.

Bruce Wrenn
Apex, North Carolina

Editor's Note: The *Wixey Digital Angle Gauge* can be purchased from *Woodcraft* (800-225-1153) or by visiting www.woodcraft.com.

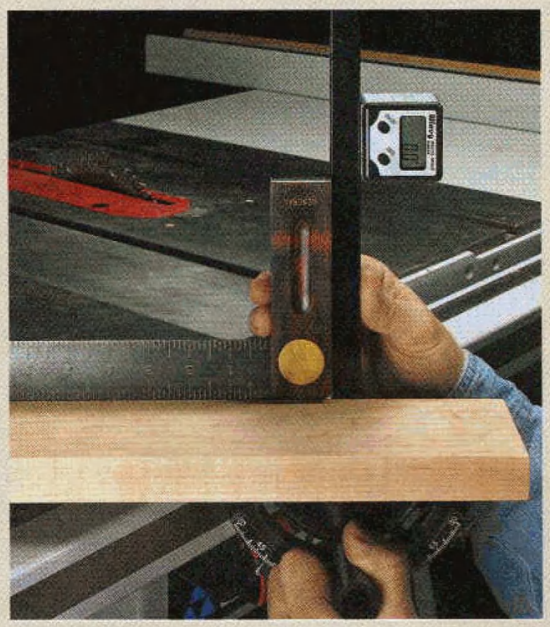

FREE TIPS BY EMAIL

Now, you can have the best, time-saving secrets, solutions, and techniques sent directly to your computer. Just go to **www.woodsmith.com** and click on ***"Sign Up for Free E-Tips."*** You'll receive one of our favorite tips by email each week.

SUBMIT YOUR TIPS

If you have an original shop tip, we would like to hear from you and consider publishing your tip in one or more of our publications. Just write down your tip and mail it to: *Woodsmith*, Tips and Techniques, 2200 Grand Avenue, Des Moines, Iowa 50312. Please include your name, address, and daytime phone number in case we have any questions. If you would like, FAX it to us at 515-282-6741 or send us an email message at: woodsmith@woodsmith.com. We will pay up to $200 if we publish your tip.

Woodsmith

No. 170 April/May 2007

PUBLISHER Donald B. Peschke

EDITOR Terry J. Strohman

MANAGING EDITOR Vincent Ancona
CONTRIBUTING EDITOR Bryan Nelson
ASSOCIATE EDITORS Phil Huber, Ted Raife
ASSISTANT EDITORS Ron Johnson, Mitch Holmes, Randall A. Maxey, Dennis Perkins

EXECUTIVE ART DIRECTOR Todd Lambirth
SENIOR ILLUSTRATORS David Kreyling, Dirk Ver Steeg, Harlan V. Clark
ILLUSTRATORS David Kallemyn, Peter J. Larson
GRAPHIC DESIGN INTERNS Shelley Cronin, Katie Rodemyer

CREATIVE DIRECTOR Ted Kralicek

SENIOR PROJECT DESIGNERS Ken Munkel, Kent Welsh, Chris Fitch, Jim Downing
PROJECT DESIGNERS/BUILDERS Mike Donovan, John Doyle
SHOP CRAFTSMEN Steve Curtis, Steve Johnson
SR. PHOTOGRAPHERS Crayola England, Dennis Kennedy
ASSOCIATE STYLE DIRECTOR Rebecca Cunningham
ELECTRONIC IMAGE SPECIALIST Allan Ruhnke
VIDEOGRAPHERS Craig Ruegsegger, Mark Hayes

Woodsmith® (ISSN 0164-4114) is published bimonthly (Feb., Apr., June, Aug., Oct., Dec.) by August Home Publishing Company, 2200 Grand Ave, Des Moines, IA 50312.
Woodsmith® is a registered trademark of August Home Publishing.

Copyright© 2007 August Home Publishing Company. All rights reserved.

Subscriptions: Single copy: $4.95. One year subscription (6 issues), $24.95. (Canada/International add $10 per year, U.S. funds.)
Canadian Subscriptions: Canada Post Agreement No. 40038201. Send change of address information to PO Box 881, Station Main, Markham, ON L3P 8M6. Canada BN 84597 5473 RT
Periodicals Postage Paid at Des Moines, IA and at additional offices.
Postmaster: Send change of address to *Woodsmith*, Box 37112, Boone, IA 50037-2112.
Subscription Questions? Write to *Woodsmith*, P.O. Box 842, Des Moines, IA 50304 or call 1-800-333-5075, 8:00 am to 5:00 pm, Central Time, weekdays. Or send an email to: orders@woodsmith.com
Email: woodsmith@woodsmith.com
World Wide Web: http://www.Woodsmith.com

www.Woodsmith.com

ONLINE SUBSCRIBER SERVICES

- **ACCESS** your account
- **CHECK** on a subscription payment
- **TELL US** if you've missed an issue
- **CHANGE** your mailing or e-mail address
- **RENEW** your subscription
- **PAY** your bill

Click on "Manage My Account" in the list on the left side of our home page. Menus and forms will take you through any of the account-maintenance services you need.

HOW TO REACH US:

FOR SUBSCRIPTIONS, ADDRESS CHANGES OR QUESTIONS, WRITE OR CALL:
Customer Service
2200 Grand Ave., Des Moines, IA 50312
800-333-5075 8 a.m. to 5 p.m. CT

OR VISIT OUR WEB SITE:
www.Woodsmith.com

AUGUST HOME PUBLISHING COMPANY

Printed in U.S.A.

Edge Sanding Fence

My belt/disc sander is an invaluable tool in my shop. However, using the belt sander can be a challenge sometimes. The problem is supporting tall or odd-shaped workpieces that won't sit flat on the table of my sander. The solution I came up with is the auxiliary fence shown in the photo at right.

The drawings below show how it's put together. The angled face is the same width as the base and matches the height of the upright support. That gives the workpiece a solid platform to rest on.

The base is wide enough to allow the fence to be clamped securely to the sander table. The front edge of the base is beveled to match the taper of the upright support.

The tapered upright holds the face at an angle to the sanding belt. This allows me to sand the edge of a long workpiece evenly (right photo). It also uses the entire width of the sanding belt. Not only does that reduce the chance of "burning" the workpiece on one area of the sanding belt, but it also evens out the wear, helping the belt last longer.

Now, using my belt sander is much easier. I can concentrate on sanding the workpiece evenly, rather than fighting to keep it in contact with the belt.

Serge Duclos
Delson, Quebec, Canada

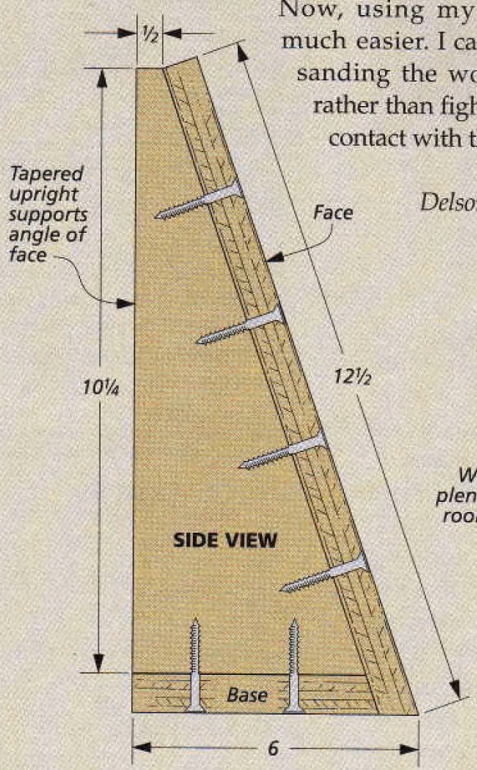

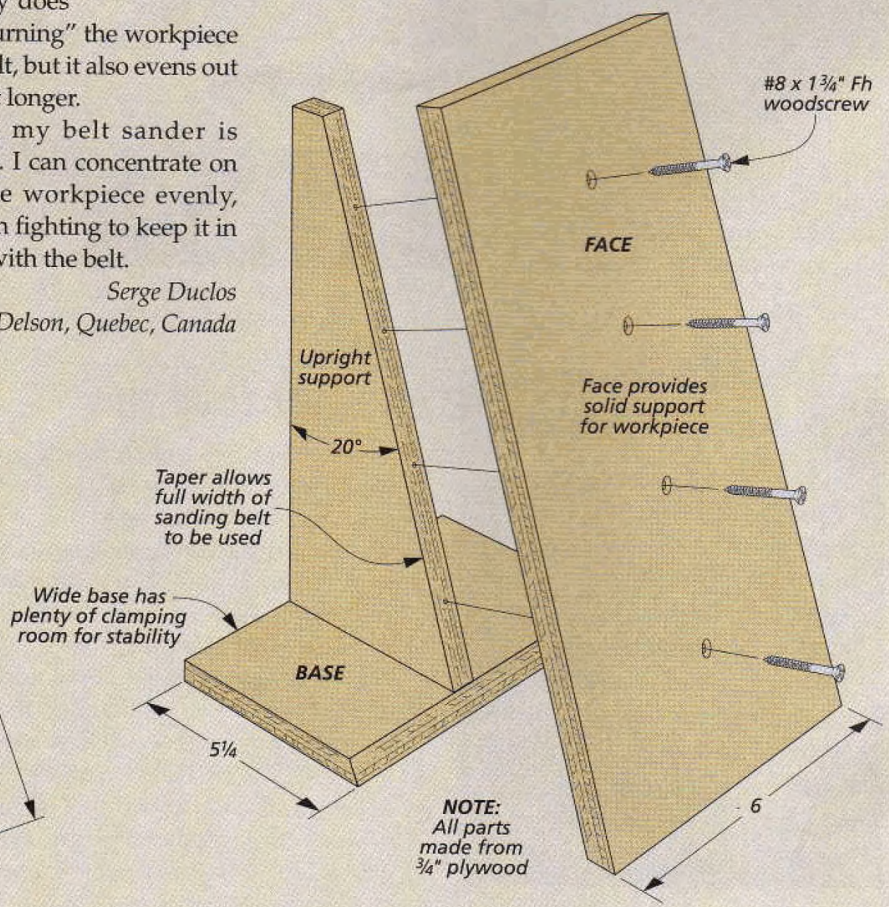

Hand Plane Saddle

I wanted a way to protect the blade of my hand plane from damage when I set it down or while it's in storage. The saddle you see pictured here provides the protection I'm looking for.

The saddle is simply a platform for the plane to sit on. I made the base, then glued on side runners to fit against the sides of the plane (drawing below). A cove routed along the top edges simply provides an easy grip when removing the saddle from the plane.

Two adhesive magnetic strips (available at most office supply and hardware stores) hold the saddle to the sole of the plane. They also keep the blade from resting on the bottom of the saddle and dulling or damaging the edge.

Now, the saddle lets me leave the blade at its proper setting, without worrying about it getting damaged when it's not being used.

Jared Maxey
Des Moines, Iowa

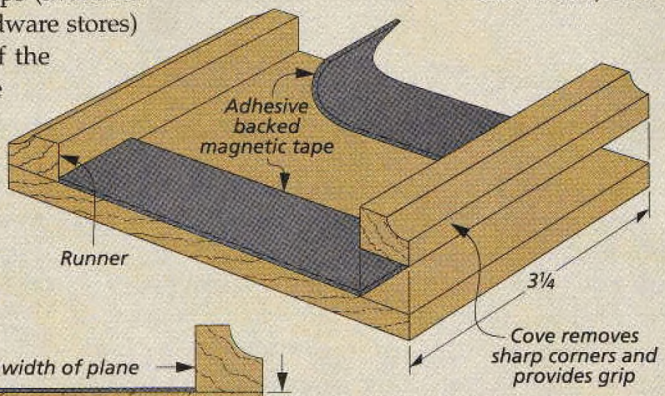

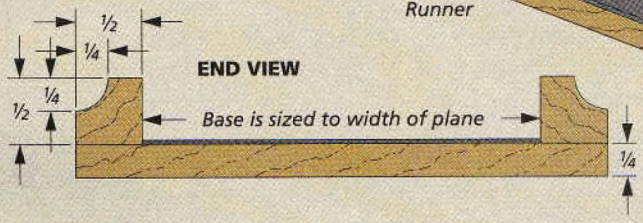

Quick Tips

MAGNETIZED CRADLE

The commercial push stick I bought to use with my table saw came with a cradle to store it in when I'm not using it. However, it seems I can never find the cradle when I'm ready to store the push stick.

My solution to keeping the cradle nearby was to attach self-adhesive magnetic tape to its underside. The strips hold it to the body of my table saw within easy reach.

Lou LaFrate
Brighton, Michigan

VIDEO CASE PARTS STORAGE

While reorganizing my video library, I realized that the old plastic video tape cases would make great storage containers for my shop.

I've recycled them to store small hardware, screws, and tools. And since the cases are all the same size, they stack up nice and neat.

William Monahan
Sarasota, Florida

BIT REMOVING CLAMP

Removing a stubborn router bit from the collet can be difficult. To solve this, I use a small pistol-grip clamp with rubber pads.

Just tighten the clamp on opposite sides of the bit and pull on the clamp to remove it. The soft rubber pads protect the sharp edges of the bit and your fingers as well.

Michael Walton Jr.
Warsaw, Indiana

Win This Porter-Cable Variable Speed Router

That's right, send us your shop tips. If your tip or technique is selected as the featured reader's tip, you'll win a *Porter-Cable* variable speed router just like the one shown here. Send your tips and techniques to: *Woodsmith,* Tips and Techniques, 2200 Grand Avenue, Des Moines, Iowa 50312. Or send us an email message at: woodsmith@woodsmith.com.

The Winner!

Congratulations to George Person of Costa Mesa, California. His router edge guide was selected as the winner of the *Porter-Cable* router. His guide helps him rout dadoes and grooves away from a workpiece's edge.

To find out how you could win a *Porter-Cable* variable speed router, check out the information on the left.

fast, smooth cuts with a Glue Line Rip Blade

This blade quickly cuts stock to width without leaving blade marks and means you can glue up boards without extra cleanup steps.

Traditional rip blades are made to do one task — cut boards to width quickly. But the price you pay for speed is a less-than-smooth cut. Which means you have to clean up the edge. That extra step doesn't seem worth the time saved using a rip blade.

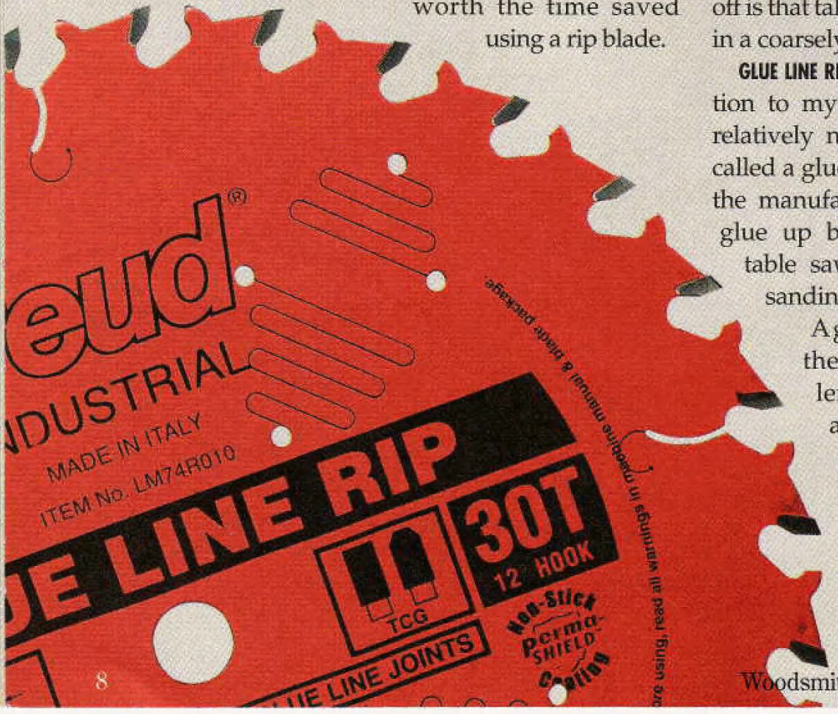

▼ Innovative tooth configurations help glue line rip blades cut cleanly.

The reason a traditional rip blade can cut so fast is that it has fewer teeth — most have 24 teeth. Since each tooth ends up taking a bigger bite, the blade can chew its way through a board quickly. The trade-off is that taking a bigger bite results in a coarsely cut edge.

GLUE LINE RIP BLADES. I found a solution to my ripping troubles in a relatively new type of blade. It's called a glue line rip blade because the manufacturers claim you can glue up boards straight off the table saw, without jointing or sanding away blade marks.

A glue line rip blade solves the quality-of-cut problem without losing the advantage of high cutting speed. And the secret to how it does this lies in the teeth.

TOOTH NUMBER. Perhaps the easiest way to get a smoother cut is to increase the number of teeth on the blade. But the more teeth that are put on the blade, the slower it will cut.

Glue line rip blades strike a balance by only adding a few more teeth — increasing the tooth count from 24 to 30. That step alone will make some difference in quality. But the rest of the improvement comes from the tooth geometry.

TRIPLE CHIP TOOTH. If you look closely at a traditional rip blade, you'll see that it has a single type of tooth — with a flat-topped shape. You can see this in the upper drawing on the opposite page.

In comparison, a glue line rip blade combines a flat-top tooth with either an alternating top bevel tooth or a triple chip tooth, as shown in the lower drawing. The result is you have two different cutting actions going on at the same time.

The shaped teeth remove most, but not all of the waste in the kerf.

The flat teeth then follow to clean out the rest of the waste and square up the corners of the cut.

HOOK ANGLE. It's not only the way each tooth is ground that affects the quality and speed of the cut. The hook angle of the tooth is important, too. The hook angle is how far the tooth leans into the cut — the higher the angle, the more aggressive the cut. (The hook angle on most table saw blades ranges from 10° to 20°.)

Since adding teeth slows down the cutting speed, some of the glue line rip blades increase the hook angle to make up for it. While some had an average 12° hook, one blade had a hook angle as high as 22°.

BLADE PLATE. There's more to a table saw blade than just the teeth, though. Even the plate the teeth are attached to plays a role in making it a smooth operator.

Like most modern table saw blades, glue line rip blades have a few high-tech features to keep the blade running straight and true. In the lower photo on the opposite page, you'll see expansion slots and laser-cut vibration channels. These allow the blade to expand and contract during use without deforming or twisting out of alignment.

Besides these basic additions, glue line rip blades can incorporate another feature — thicker plates. With fewer teeth taking bigger bites, there's more stress placed on each tooth. So a thicker blade plate adds rigidity and helps stabilize the blade.

A thicker plate has an added benefit. It provides more mass to help the spinning saw blade power through tough hardwood.

A HYBRID BLADE. In use, I found that the performance of a glue line rip blade ranked between a traditional rip blade and a combination blade. (Combination blades provide a smooth edge, but work slowly.) Although the glue line rip blade cut a bit slower than a standard rip blade, the smoothness of the cut looked a lot like the edge I get from a good-quality combination blade.

OTHER JOBS. Breaking down boards isn't the only time a rip blade will come in handy. There are a few table saw tasks that are really rip cuts. In the box below, you'll see three tasks where I'll switch to a rip blade.

BOTTOM LINE. "Do glue line rip blades leave an edge ready for glue up?" I say "Yes." And the time you'll save ripping lumber makes the blade a worthwhile choice.

Traditional Rip Blade. Most blades have 24 flat-topped teeth.

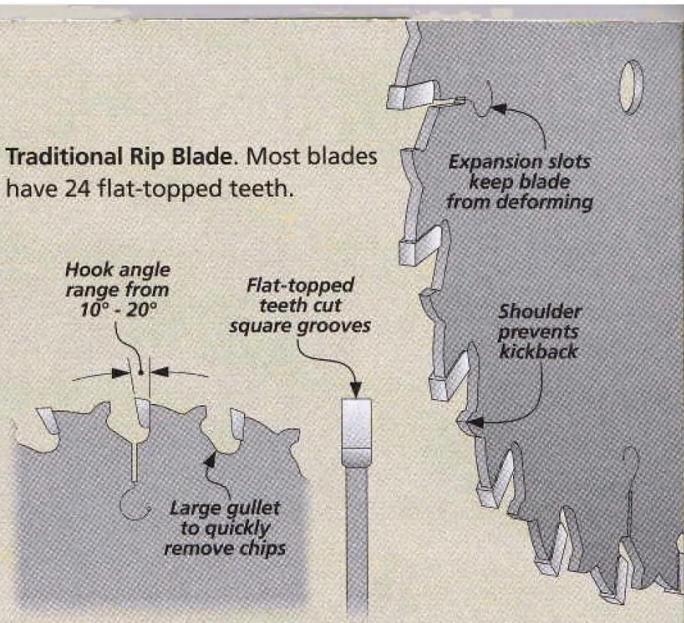

Glue Line Rip Blade. Adding a few more teeth and changing the shape, improves the smoothness of the cut edge.

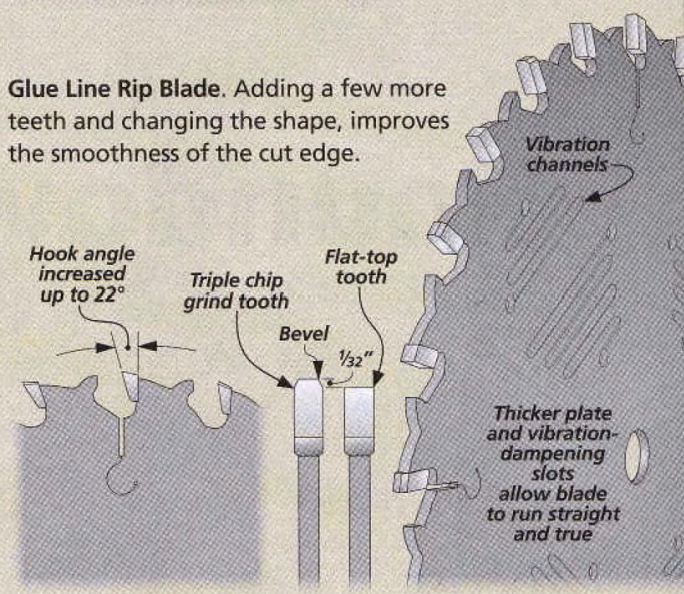

How-To: Do More with Your Rip Blade

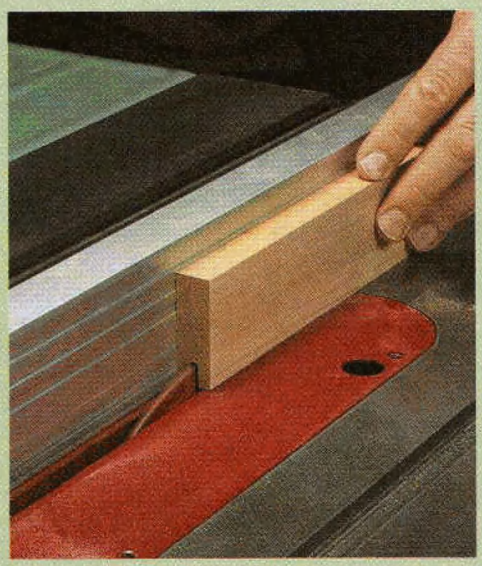

Grooves. *A rip blade is ideal for cutting flat-bottom grooves to hold panels or for stub tenon and groove joinery.*

Tapers. *Combination blades can bog down cutting tapers. A rip blade reduces burning and puts less stress on the saw.*

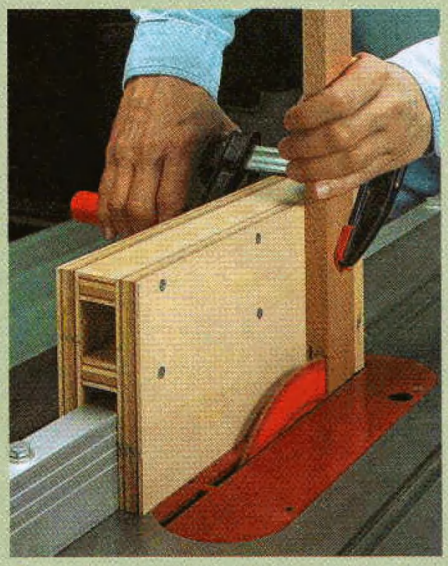

Tenons. *When paired with a tenoning jig, a rip blade makes it easy to get smooth tenon cheeks and square shoulders.*

creating profiles with Roundover Bits

With your router and a couple of roundover bits, you can create a variety of great-looking profiles. It's simple and easy to do.

SINGLE PASS PROFILES

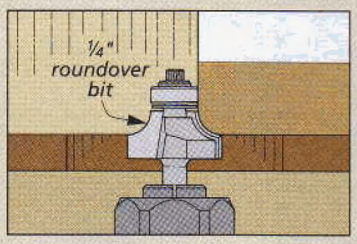

BASIC ROUNDOVER

Removing the sharp edge on a workpiece can really soften the look of a project. To do this, simply set the depth of cut to conform with the bit profile and make a pass. Use a 3/8" or 1/2" bit for a more rounded edge.

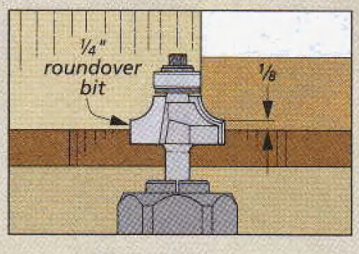

ROUNDOVER WITH SHOULDER

Adding a shoulder to the profile is easy. All you need to do is raise the bit slightly. This allows the bit to cut deeper, leaving a small step. You can vary the size of the shoulder by simply raising or lowering the bit.

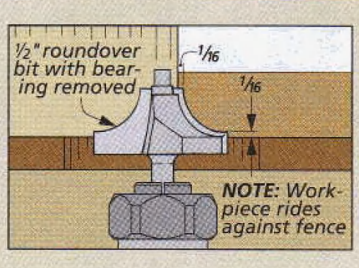

BEADING

If you want a beaded look, you'll need to leave a step at the top and bottom of the bit when you make the cut. This can be done by either changing to a smaller size bearing or removing it and using the fence.

Roundover bits are the "workhorses" of router bits. They may not have the same "wow" factor as an ogee or complex profile bit. But with the right set up — and a little bit of imagination — you can use them to create a lot of interesting profiles.

All the profiles shown in the photo above were made with just two roundover bits. It's easy to do. All it takes is a little attention to detail.

ONE BIT, DIFFERENT CUTS. There isn't any great secret to the process of routing these profiles. The key is to avoid getting locked into thinking a single router bit can make only one cut.

Some of the profiles you see are made using a single bit and only one pass. Others are made with two passes. But you can also create a lot of different profiles by simply changing the height of the bit slightly. This allows different parts of the bit to cut at a variety of depths to add a shoulder or beaded appearance.

And by mounting the bit in the router table, you can use the fence as a bearing surface. This lets me round over both sides of the workpiece to create even more profiles.

ACCURATE CUTS. Whether you use a hand-held router or a router table, the key to success is making clean, accurate cuts. This usually means taking the time to get everything set up properly. And then making several light passes with the bit rather than a single, deep cut.

Finally, a little fine sanding once you're done routing will smooth any small ridges that might be left behind. The end result will be a great-looking profile every time.

DOUBLE ROUNDOVER WITH SHOULDERS

You can use this profile to add a highly decorative touch. Set up to cut a small shoulder and make the first pass. Then turn the workpiece over and make another pass. Use sandpaper to smooth any ridges.

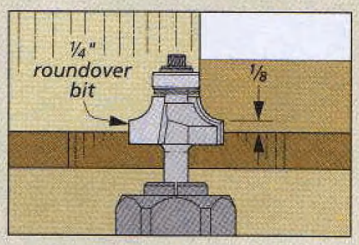

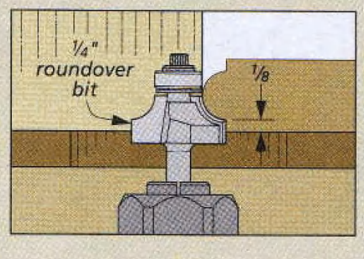

DOUBLE ROUNDOVER

This profile is easy to make. Simply set up to cut a basic roundover and make the first pass. Then all you need to do is turn the workpiece over and make another pass on the other side. This will ease the edges on both sides.

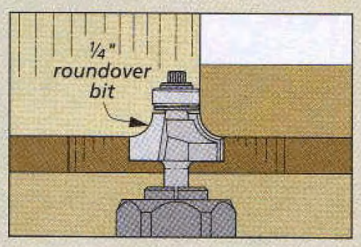

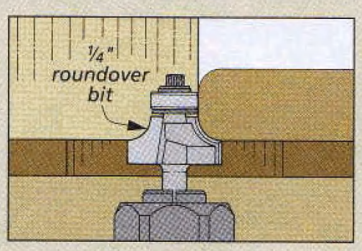

BULLNOSE

A bullnose adds a finished look to the edge of a table or shelf. The trick is to use a larger radius bit. Then raise the bit to half the height of the workpiece, so that just a portion of the cutting edge is exposed.

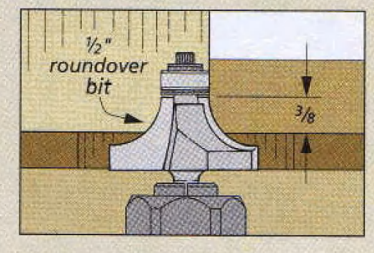

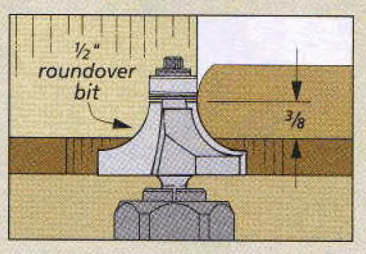

THUMB NAIL

Cutting this profile requires the use of both the ¼" and ½" bits. First, cut a basic roundover using the smaller bit. Then turn the workpiece over and use the larger bit to round over the other side to make the thumb-like edge.

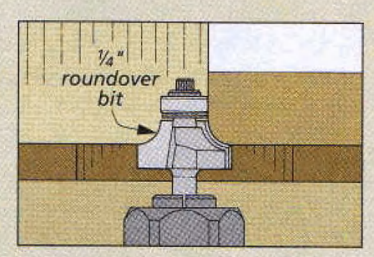

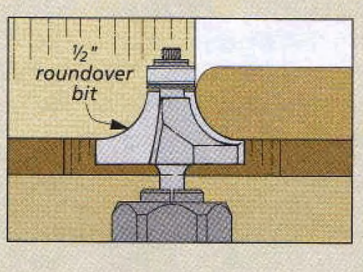

180° Roundover Profile: No Flat Center Ridge

Whenever I use a roundover bit to cut a full roundover along a table top or workbench, a flat center ridge remains after the second pass. This is because the bearing that's designed to run along a flat surface now runs along a rounded surface on the second pass. This allows the bit to take more of a bite as you make the second pass (first drawing).

You can solve this problem by using the corner rounding bit with an *Ultra-Glide Radius Bearing* from *Amana* (photo at left). As shown in the drawing at far right, the bearing is contoured. This lets it ride along the rounded surface and allows the bit to make its full roundover profile cut on the second pass.

The bits come with ½" shanks in three different sizes for making roundover profiles on 1", 1½", and 2" stock. Sources for these bits can be found on page 51.

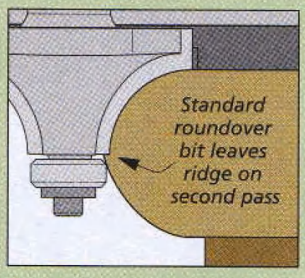

▲ On the second pass, the bearing no longer has a flat edge to ride on. This can leave a small step or ridge in the profile.

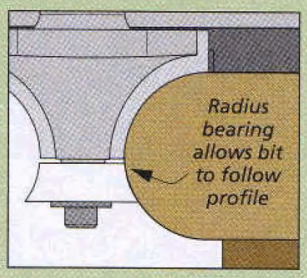

▲ Exchanging the flat steel bearing for the radius bearing allows the bit to easily follow the rounded profile.

table saw techniques for Cutting Plywood

Cutting plywood by yourself can be tricky. But with a little planning and the right techniques, you can do it safely with great results.

Cutting a full sheet of plywood (or any other sheet good) on the table saw presents some real challenges. The sheet is heavy and awkward to handle. And once you get it up on the table saw, you almost need three hands to hold onto the workpiece, turn the saw on, and then control the sheet to make the cut.

But if you spend a little time up front to prepare, it doesn't have to be a difficult process. It all starts with the proper setup.

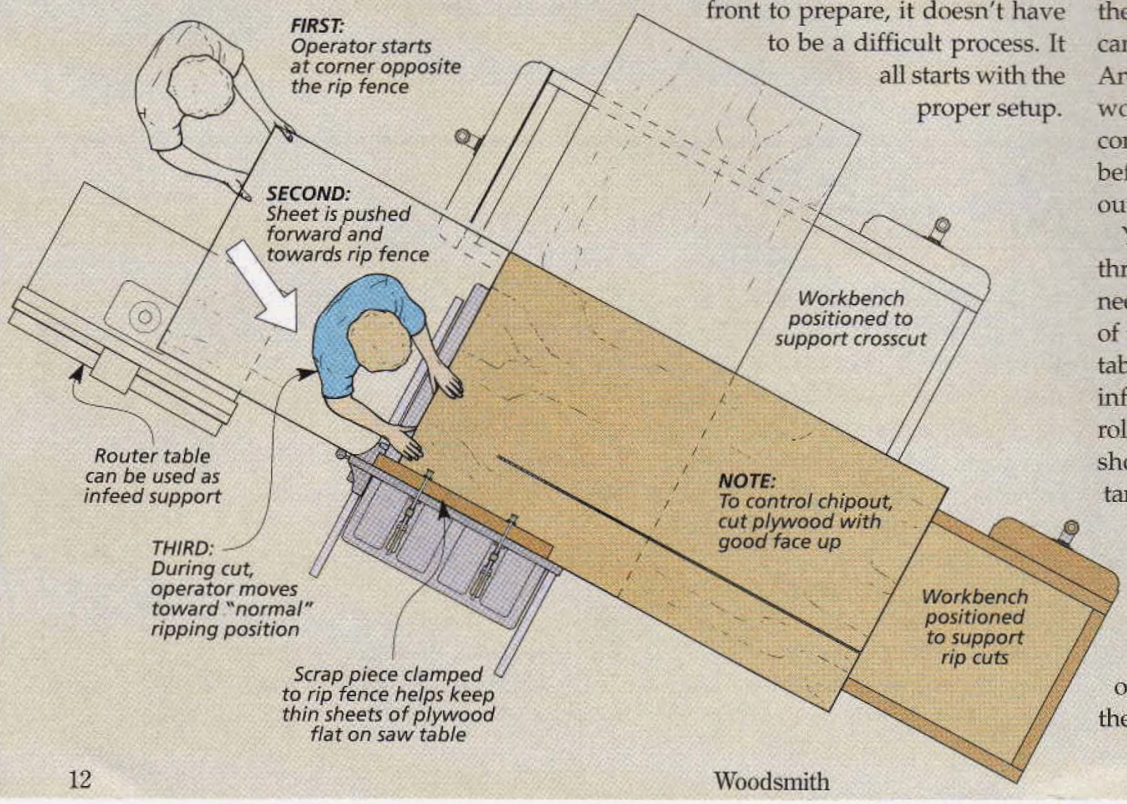

SUPPORT ALL AROUND. The most important consideration when cutting large panels is making sure the workpiece is going to be supported — before, during, and after the cut. Sheets of ½" or ¾" stock can be pretty heavy and unwieldy. And thin stock like ⅛" or ¼" plywood is often flimsy and hard to control. So I like to take some time before turning on the saw to figure out how to support the full sheet.

You can see in the drawing the three main areas where support is needed — the front, side, and rear of the saw. In my shop, my router table is the right height to use as an infeed support. You can also use roller supports or a workbench, as shown in the photos. The important thing is to make sure the sheet is supported and that you can maintain control at all times. Making a "dry run" with the blade lowered is a good idea.

SAW SETUP. Once you've figured out how you're going to support the sheet, there are a couple of

other things you can do to ensure success. The first is to make sure you're using a sharp plywood or combination blade. Second, it's a good idea to lubricate the surface of your table saw. A paste wax or a product like *Boeshield T-9* or *Bostik's DriCote* will work well. This makes the sheet slide easier for better control during the cut.

MAKING THE CUT. With all the preparation done, you're ready to turn on the saw and make the cut. Here's where body and hand position are really important. The drawing on the opposite page and the photos show what I mean.

The key is to not only support the end of the sheet, but also feed it through the blade and at the same time keep the edge tight against the rip fence. That's important because even a slight movement at the trailing end of the sheet can cause it to pull away from the fence, resulting in binding or kick back.

Start by standing at the corner of the sheet so you can keep it tight against the fence as you push it through the blade. Then as you proceed through the cut, step behind the sheet to push it through.

THIN SHEETS. Thin plywood presents its own set of problems. It often flexes, as shown in the photo above. But I've learned to use this to my advantage. By lifting the end of the sheet and sliding it through the cut, I keep the edge against the fence.

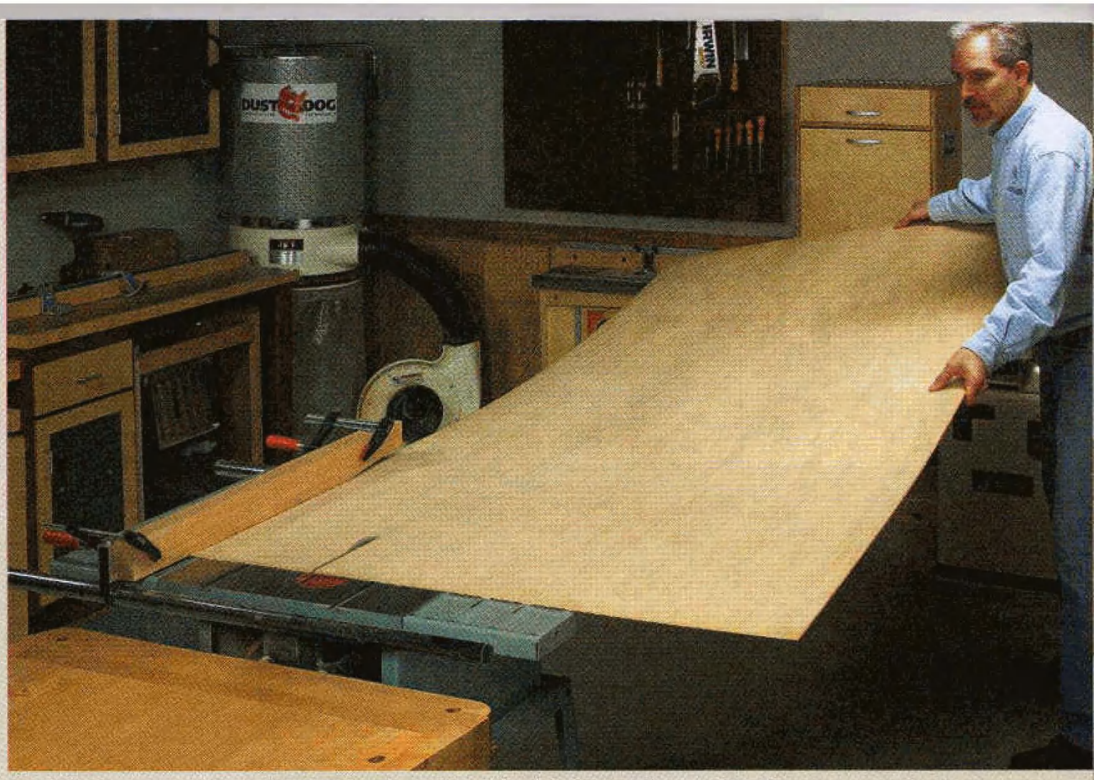

▲ Thin sheet stock can be hard to handle. A hold-down clamped to the rip fence keeps the sheet flat on the saw table. Then it's just a matter of keeping the sheet tight against the fence.

FENCE HOLD-DOWN. The photo above shows a board clamped to the rip fence. It serves as a hold-down. This helps keep thin sheets from riding up on top of the blade and keeps them flat on the table.

CROSSCUT VERSUS RIP. All these techniques work well for ripping sheets of plywood. But for crosscutting, you may need to change tactics. To begin with, you'll want to make sure you have adequate support alongside the table saw. You also need to make sure that you're able to keep the end tight against the fence throughout the cut (left photo below). On narrower pieces, I'll use an auxiliary fence on the miter gauge or a crosscut sled (right photo below). This helps avoid binding and possible kickback.

Cutting plywood by yourself can be tricky. But with these tips, you can make it manageable. W

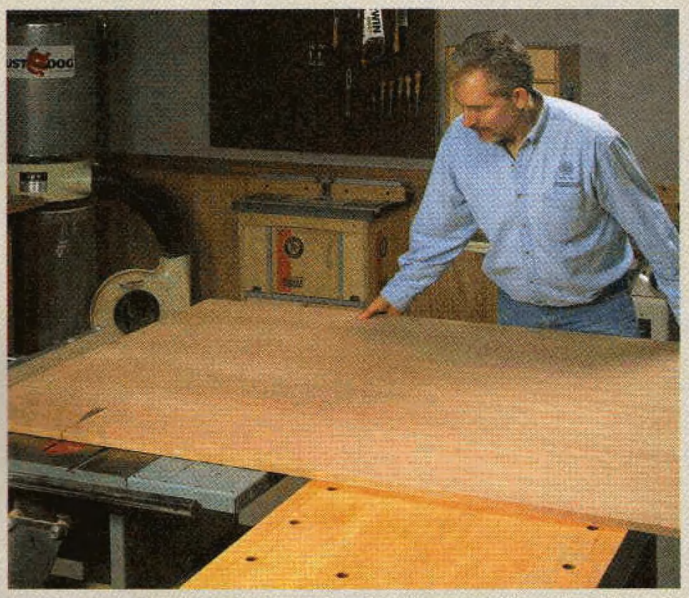

▲ Crosscutting large sheets can be done safely using the rip fence. The key is to maintain control of the panel and keep the end tight against the fence without "rocking."

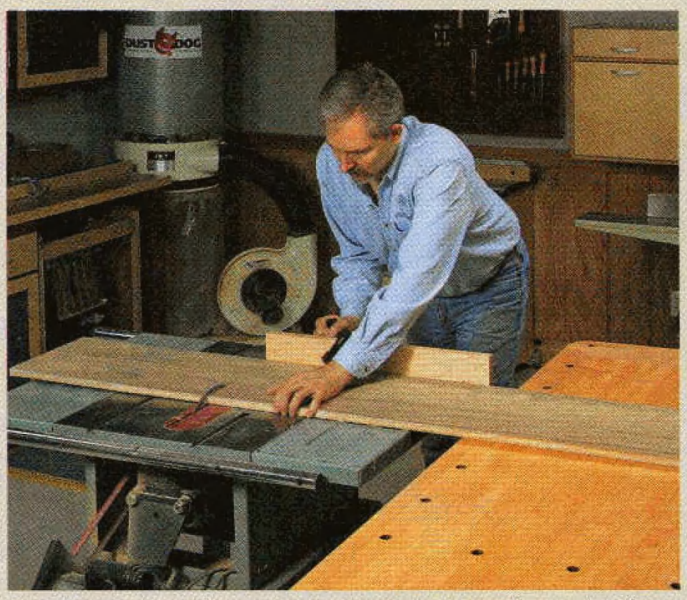

▲ When crosscutting narrower panels, it's easier and safer to use the miter gauge with an auxiliary fence. Use your free hand to keep the panel tight against the miter gauge.

low-cost Veneering Made Easy

The inexpensive and low-tech *Thin Air Press* puts vacuum bag veneering within reach of every woodworker. And you won't believe the results.

Vacuum bag veneering is one of the neatest woodworking techniques to come along in quite a while. The idea is pretty simple — harness the force exerted by atmospheric pressure to press your veneer onto the substrate while the glue dries. To do this, you place everything inside a sealed vinyl bag and then remove the air to create a vacuum.

Unfortunately, this handy technique initially came with a one serious drawback — a high cost. The electric vacuum pump, heavy duty bag and other items needed can end up setting you back hundreds of dollars.

▲ The entire kit — bag, pump and all — fits into a small, "skateboard-shaped" box.

THE THIN AIR PRESS. The good news is there's now a low-cost option for this handy technique. The *Roarockit Thin Air Press* makes small-scale vacuum bag veneering practical for occasional users. For about $60 you can buy the *Roarockit* kit, shown at left, and set yourself up in the business of vacuum bag veneering. (Refer to Sources on page 49.)

THE KIT. This system was originally designed for use by skateboarding enthusiasts. It provided them with a cheap and easy way to laminate custom wood skateboard "decks."

The people at *Roarockit* were able to keep the cost down by eliminating the need for an expensive vacuum pump. Instead, they substituted a simple, plastic hand pump and one-way valve system borrowed from the world of wine lovers. (I have one of these pumps in my kitchen drawer to evacuate and seal open bottles of wine.)

Along with the hand pump, the kit includes a heavy vinyl bag with a stopper valve and butyl rubber sealing tape affixed. You have your choice of two bag sizes — 13½" x 47" (skateboard size) or 26" x 28". (The "square" bag is a more practical choice for most woodworking projects.) A couple of extra sealing tapes and a length of "breather netting" round out the kit.

THROUGH THE PACES. You may think this sounds a little too simplistic to work. And I'll admit, I was also a bit skeptical. But the proof is in the pudding, and after giving the system a try, I was won over. It works much better than I expected.

The kit comes ready to use right out of the box. All you need to supply is a project. I put it through its paces by veneering several flat panels as well as a curved lamination. For the most part, the technique is easy to master. The photos in the box on the opposite page show the steps to veneering a panel.

THE STACK. First, you'll need to prepare the "veneer stack." This consists of a substrate panel on which the glue is spread (MDF is a good choice), the veneer (sized to fit the panel), and a non-stick caul to distribute the pressure evenly over the veneer and panel. A piece of melamine or laminate-covered MDF makes a good caul.

BREATHER NETTING. Now, before placing the stack in the bag, you need to cover it with a piece of the plastic breather netting. This loose mesh

provides a pathway for the air in the bag to reach the valve.

IT'S IN THE BAG. With the stack in the bag and topped with the breather netting, you're ready to seal it up. For the first use, you'll have to peel the paper covering off of the sealing tape. Then start at one end and press the bag firmly against the tape. The rubbery, caulk-like tape sticks to the vinyl of the bag extremely well, so this part is pretty easy. The only trick is to make sure you don't leave any gaps.

MAN THE PUMP. With the bag sealed, now comes the fun part. After wetting the valve opening to improve its efficiency, place the pump over the stem and go to work. The pump works on the pull stroke and it's not a snug fit on the stem. So you'll need one hand to hold it in place while you pump with the other.

At first, there will be little resistance and you'll wonder if you're making any progress. But after about 100 strokes (only a minute or so), the bag will start to shrink and the effort required to pump will start to increase.

A couple minutes later the veneer stack will look like it's been shrink-wrapped. It's pretty amazing and the effort is minimal.

Honestly, I wasn't sure when to quit pumping. When the bag looked very snug and I could see good squeezeout around the edges of the panel, I took a few more strokes and called it good.

The manufacturer claims that the pump will produce a vacuum of 25 inHg (inches of mercury) — comparable to that produced by an electric pump. This amounts to about 1800 lbs./sq. ft. of pressure, more than enough to do the job.

The glue needs to set for a couple of hours. During this time I didn't notice any loss of vacuum, but I occasionally took a few pumps just as insurance. When I opened the bag and removed the panel, what I found was impressive. The veneer lay perfectly smooth and was tightly adhered.

ONE MINOR FAULT. The only complaint I have is that the sealing tape works too well. Once sealed, the bag took considerable effort to pry open and the tape was easily dislodged in the process. And when not in use, the bag would seal itself shut. But after multiple uses, I was still on my original tape. And the self-sealing problem is easily avoided by covering the tape with some non-stick paper when the bag isn't in use.

So if you have an urge to try your hand at vacuum bag veneering and don't want to break the bank, consider the *Thin Air Press*. The price is definitely right and I think you'll be pleased with the results.

▲ Before — loose and wavy in need of a pressing.

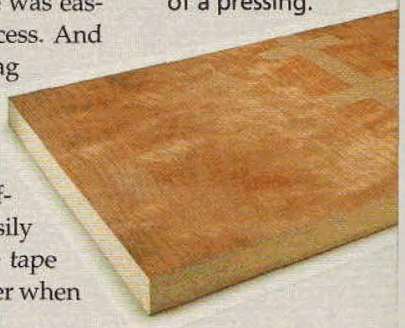

▲ After — smooth, flat, and glued down tight.

How-To: Veneer with the Thin Air Press

▲ Once the veneer stack and netting are assembled, place it all in the bag directly under the valve.

▲ Next, start at one end and firmly press the sealing tape and bag together. Be sure to check for gaps.

▲ Now, start pumping. Initially, it seems like you're not making any headway, but just keep at it.

▲ After a few minutes, your efforts are rewarded as the bag wraps skin-tight around the stack.

ONLINE EXTRA
video workshop

You can see how to use your router to make beautiful bowls at: www.woodsmith.com

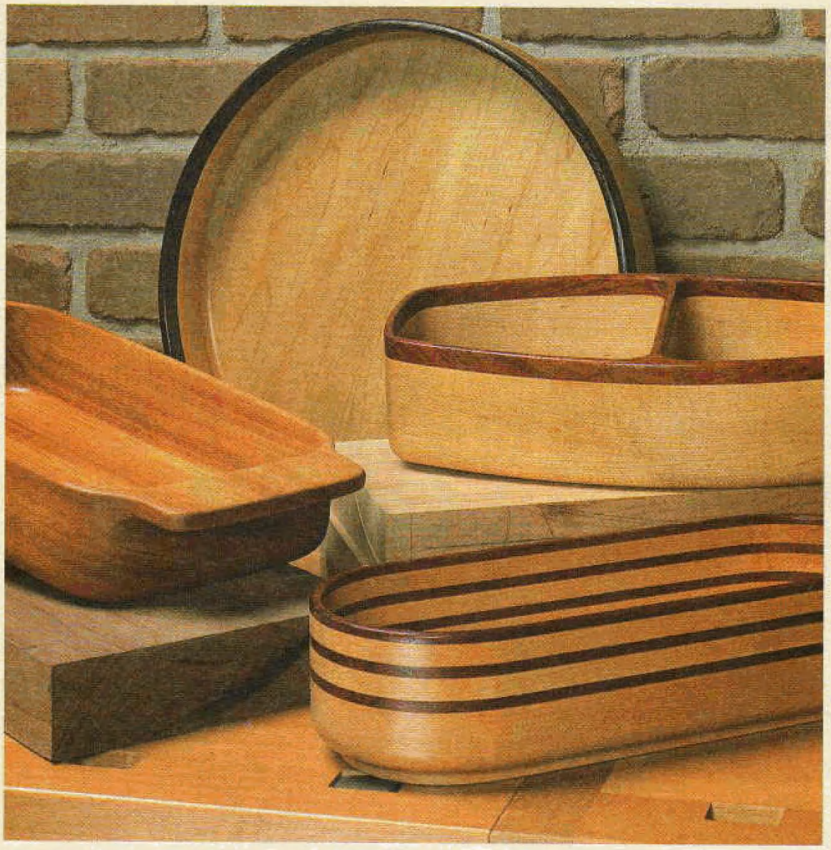

routed Bowls

You can make great-looking wood bowls without turning or carving. A template and simple router accessories make it easy.

I've always liked the look of wooden bowls. But without a lathe or carving tools, they're difficult to make. So when Chris Fitch, one of our designers, suggested there might be a way to make bowls using a router, I was more than a little interested.

All the bowls in the photo on the left were made using a hand-held router. The technique is easy. And you can make bowls in a variety of sizes and shapes.

The greatest challenge to making bowls with a router is figuring out a way to make a deep enough cut to form the inside of the bowl. But by adding a collet extension to your router, you can solve this problem. Then all you need to do is follow a simple shop-built template and you'll be making bowls in no time.

setting up your ROUTER

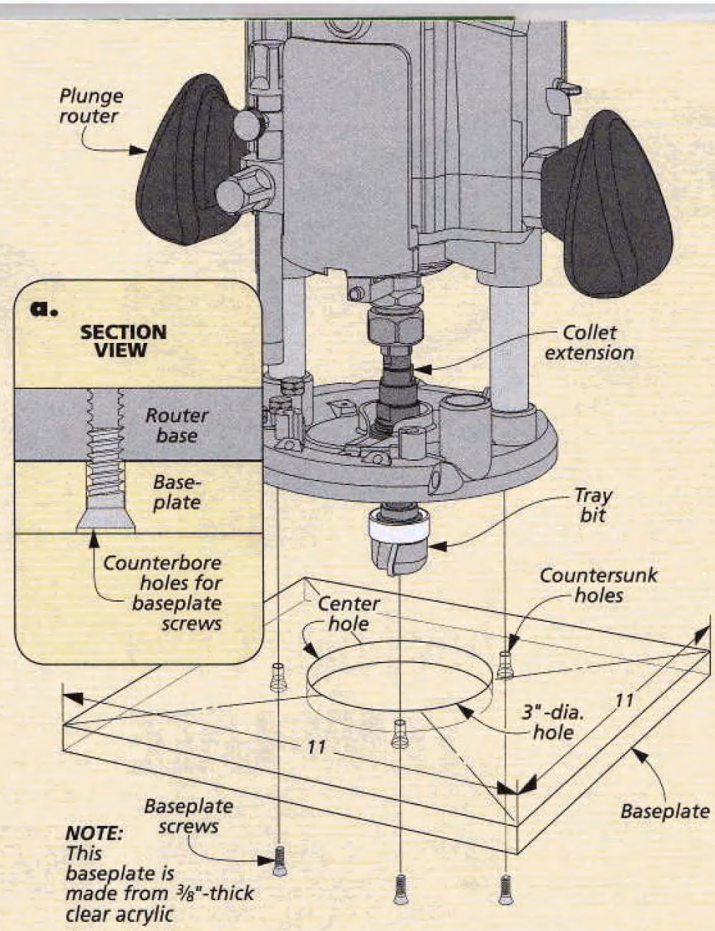

Before you begin routing bowls, there are a few things you'll need to consider. The first of these is making certain you have the right router and it's set up properly for the job.

ROUTER. I used a plunge router because I found it a little easier to make the frequent depth changes required when hollowing out the bowl. But you can use any router that has the ability (at least 2 horsepower) to handle the ½"-dia. shank collet extension and the bit you'll be using to make the cuts.

COLLET EXTENSION. Like I said before, the key to routing out the bowl is adding a collet extension to your router (box below). The extension slips into the collet of your router and adds about 2¼" to the router's depth of cut. This allows you to rout deep enough to quickly and easily form the inner shape of the bowl.

With the extension in place, you can then install a bowl and tray bit. This bit lets you make a cut that's flat at the bottom and round at the edges to shape the inside of the bowl. You'll find sources for the collet extension and bit on page 49.

There's just one other thing before you begin routing. You'll need to modify the router base so you can use it with the bowl template you'll build later.

ADD A WIDE BASE. To do this, you'll need to replace the base that comes with your router with a larger auxiliary base, like you see in the drawing at right. This larger base allows the router to ride securely on the template without falling through the wide opening, as shown in the main photo on the opposite page.

You can make the base from a number of different materials. I chose to use ⅜"-thick clear acrylic (*Plexiglas*) for my base. This made the base strong and rigid so I wouldn't have any flexing. And the clear acrylic lets me see what I'm doing as I make the cuts.

Building a new base is pretty straightforward. First, trim the base to size. Then draw lines from corner to corner to find the center. And use the original baseplate as a template to accurately mark, drill, and countersink the mounting holes. Finally, use a hole saw at the drill press to cut out the center hole.

After mounting the plate, the next step is to glue up a bowl blank and make the template you'll use to shape the inside of the bowl.

Shop Tip: Bowl Bit & Extension

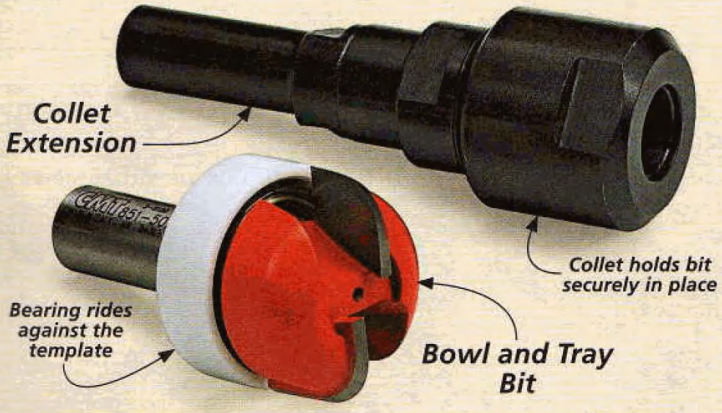

▲ A collet extension and a standard bowl and tray bit are all you need to create a variety of great-looking wood bowls in your shop using your hand-held router. (See page 49 for sources.)

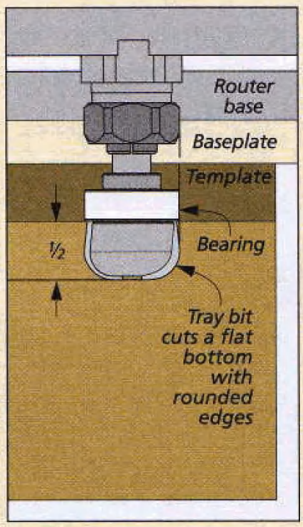

▲ Using a standard router setup, most routers will only allow you to make a cut about ½" deep.

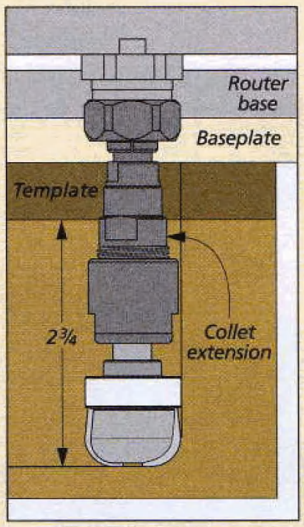

▲ With the addition of a collet extension, you can add 2¼" to the depth your router can cut.

▲ To add color to your bowl, just alternate different types of wood as you laminate the bowl blank.

bowl blank and TEMPLATE

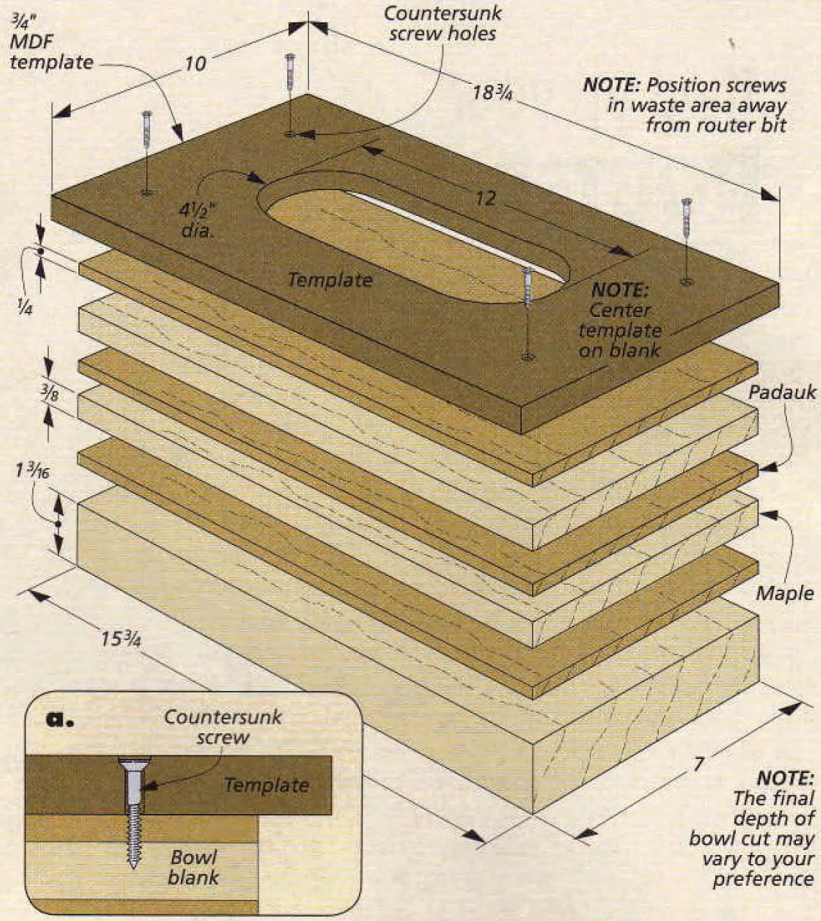

The thing that makes router-made bowls interesting is the many shapes and sizes you can create. But no matter what style you choose, the process is the same.

First, you'll need to glue up the bowl blank. This is important since it will determine the color and appearance of the bowl. You'll need to choose the wood to use. (For the bowl above, I used padauk and maple.) Then decide on the size, shape, and any options you might want. (You can see a few options on page 20.) All these determine the size of blank you'll need to make.

MAKE THE BLANK. The next step is to trim the materials for the blank to size, apply glue to the layers of wood, and clamp them together, as shown in the drawing above. I like to keep the blank under 3" thick. This way, I won't exceed the cutting depth of the router and bit when the template is added.

After the glue dries, you can remove the clamps and then move on to making the template.

TEMPLATE. To rout out the inside of the bowl, you'll need a template to guide the router. I used ¾" MDF for my template. And because I wanted to have a stable base for the router to ride on, I sized it about 1½" larger than the blank on all sides. Then you can cut away the area in the middle to match the inside shape of the bowl (box below).

Finally, attach the template securely to the blank with screws. And then you're ready to begin routing out the inside of the bowl.

How-To: Shape the Template

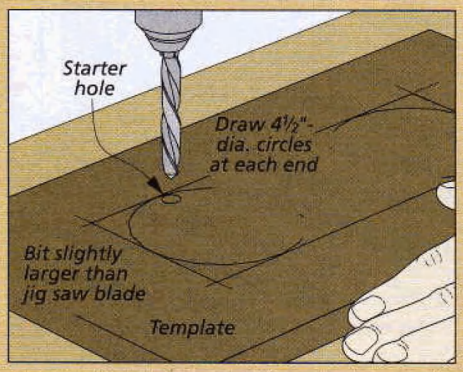

Starter Hole. *To cut out the template, begin by drilling a hole near one edge slightly larger than your jig saw blade.*

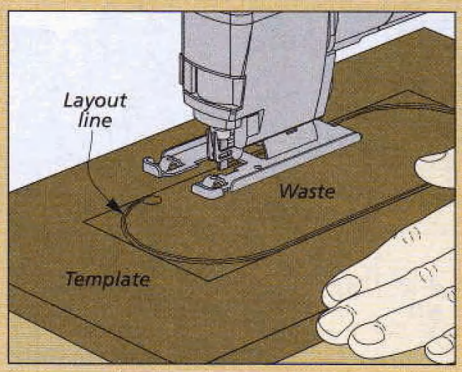

Cut Out the Waste. *After inserting the jig saw blade in the starter hole, cut along the scribed line and remove the center waste.*

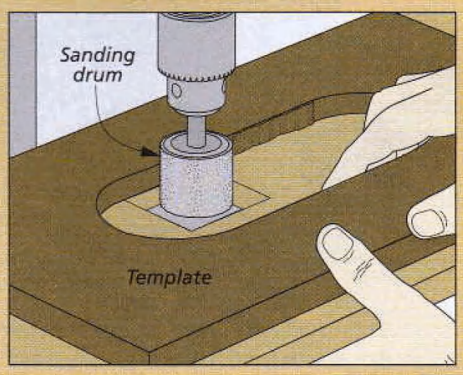

Smooth the Edges. *A sanding drum on the dril press quickly removes blade marks and smooths out the curves in the template.*

shaping the **BOWL**

Giving shape to the bowl is really pretty easy and requires just two basic steps. First, you'll use your router and the template to rout out the inside of the bowl. Later you'll cut away the outer portion of the blank at the band saw to give the bowl its final size and shape.

Since your blank is all ready to go, all you need to do is install the collet extension and tray bit in your router. Just be sure the extension and bit are tightened down snugly.

SECURE THE BLANK. Next, secure the blank in position for routing. I like to use the vise on my workbench for this. This way, when I clamp the blank in the vise, the template sits unobstructed above the top of the bench and I can tightenen the jaws firmly around the blank to keep it from moving around.

ROUT OUT THE INSIDE. With the blank secured, you can set the bit to take a 3/16"-deep cut, turn on the router, and place it on top of the template. The extension and bit project past the plate, so its easiest to tip the router slightly and slowly lower the bit onto the surface as you begin to make the cut. This way, once the bit cuts a small pocket, you'll be able to set the router flat on the template and use the bearing to guide the bit in shaping the inside of the bowl.

Since you're removing a lot of material, one thing you'll notice is the bit creates a lot of chips as it cuts. So you'll need to clear the chips from inside the bowl frequently with your vacuum as you cut away the stock.

Once you complete the first pass, drop the bit another 3/16" and remove a second layer of material. Repeat this process until the recess is cut to depth leaving 3/8" at the bottom. Then you can move on to shaping the outer surface of the bowl.

TRIM AWAY THE BLANK. With the inside roughed out, you can remove the template from the blank. The next step is to shape the outside of the bowl with the band saw.

This step is easy. First, mark the thickness of the bowl walls on the blank (first drawing below). I like to leave a little more than 1/4" so I'll have extra thickness for sanding the walls smooth. After marking the bowl, you can move to the band saw. Then you can simply follow the trim line and cut away the blank, as shown in the second drawing below.

Finally, I added a small foot to the bottom of the bowl. I used a router with a roundover bit at the router table for this job. The third drawing below shows you how this is done.

SAND AND FINISH. Once you're done with the basic shaping, all that's left is to use a power sander to smooth out the rough spots (photo above and drawing below). Then follow up with some hand sanding to complete the job. Finally, you can apply some salad bowl finish or mineral oil and it's ready for use.

Shop Tip: Speedy Sanding

▼ Wavy sanding discs attach to the sanding pad with *Velcro* loops and come in a variety of grits. They make it easy to sand into corners and curved surfaces without leaving gouges.

◄ A *Tim Skilton Sanding Pad* attached to your drill press works great for smoothing out the bottom and curved inner surfaces of the bowl. You can find sources on page 49.

Trim the Outside of the Bowl

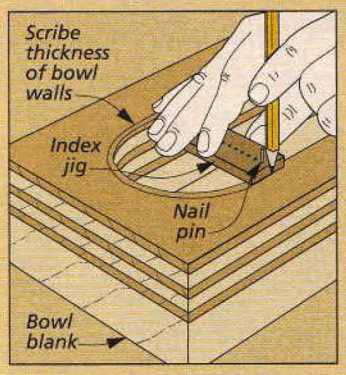

Lay Out the Walls. *A piece of scrap wood, a few holes, and a nail helps you lay out the walls.*

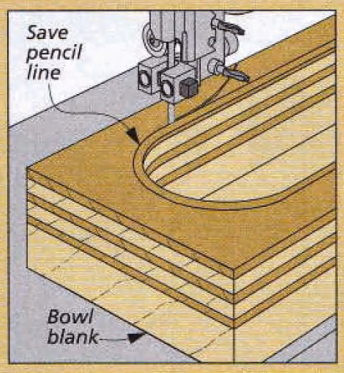

Trim The Waste. *Just follow the outer trim line with your band saw to shape the outside wall.*

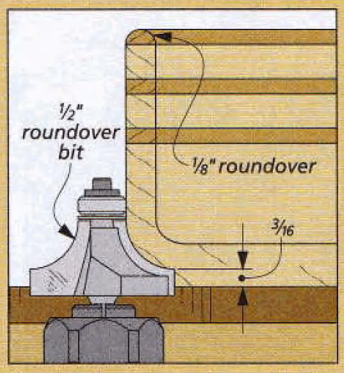

Decorative Foot. *A pass at the router table with a roundover bit adds a decorative bottom.*

Shaping The Walls. *A belt sander will quickly shape the walls to the desired thickness.*

3 Bowl Options

BOWL TEMPLATE

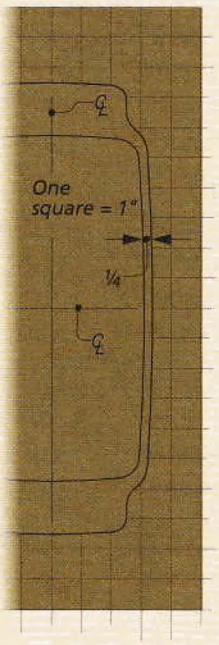

Bowl With Handles

In addition to a variety of shapes, options like handles can be added to your bowls (photo above). To do this, you'll need to modify the blank and add an extra step. Begin by lengthening the blank so you'll have added stock for the handles.

Then you can rout out the inside of the bowl as before. Next, you'll need to flip the blank over and make a second template for the bottom to help you create the handles.

BOTTOM TEMPLATE. You'll want to be sure the bottom template is sized correctly, so use the template you used for making the inside of the bowl to help you out. Just place the original template on a piece of MDF, as shown in the first drawing below. Then trace the pattern of the cutout onto the MDF template.

Once the pattern is drawn you can remove the original template. Then enlarge the pattern by ¼" all the way around, and trim the template to shape at the band saw.

Next, you can use carpet tape to attach this template to the bottom of the blank, as shown in the top second drawing. With the template secure, use it to guide your router as you rout away the stock at both ends of the blank. Just be sure to leave about ¼" thickness at the bottom for the handle (second drawing).

OUTER SHAPE. With the routing done, you can flip the blank over and trim away the waste, making curved cuts to transition from the the sides to the handles (lower drawings). A little sanding will smooth the curves around the handles of the bowl.

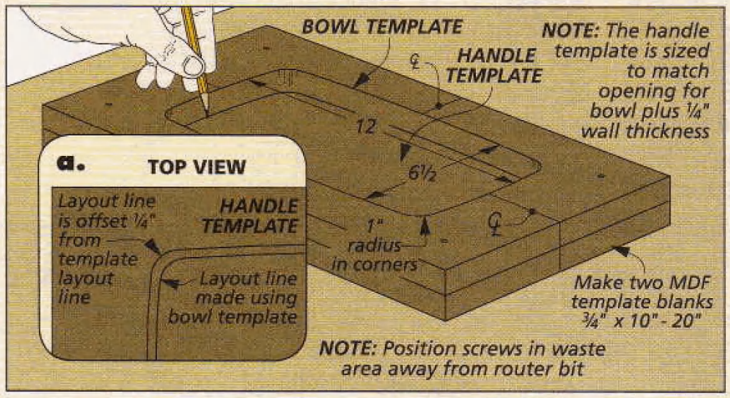

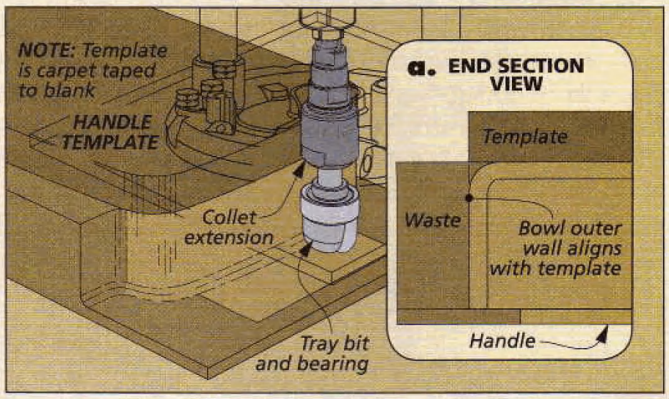

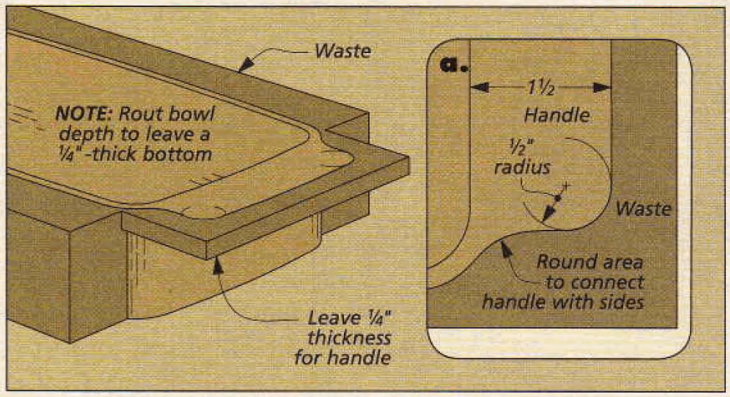

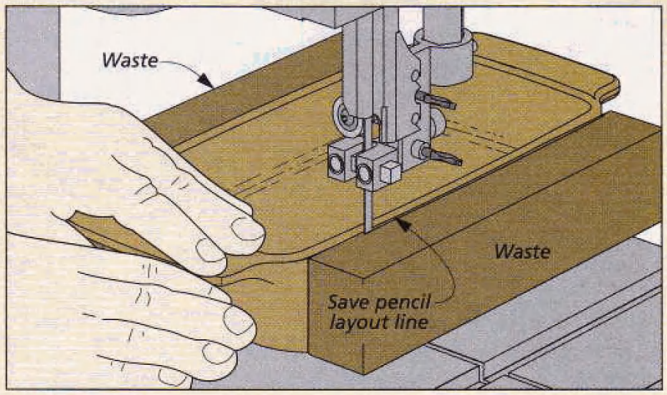

Divided Bowl

Adding a divided compartment, as shown in the bowl at right, is easy. All it takes is a little template planning.

First, trim a piece of ¾" MDF slightly larger than your blank. Then divide the length and width of the template into two equal parts and draw lines to mark these points, like you see in the first drawing below.

Next, you'll want to lay out the area of the inside of the bowl that is to be routed away. Just be sure to leave at least ¼" along the center line to create the divider as the stock is routed away (detail 'a' below).

To ensure the compartments are identical, just cut out one side of the template. This allows you to rout one compartment and then simply turn the blank around, secure the template again, and trim away the stock on the other side (second drawing below).

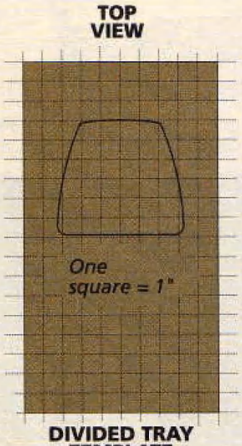

DIVIDED TRAY TEMPLATE

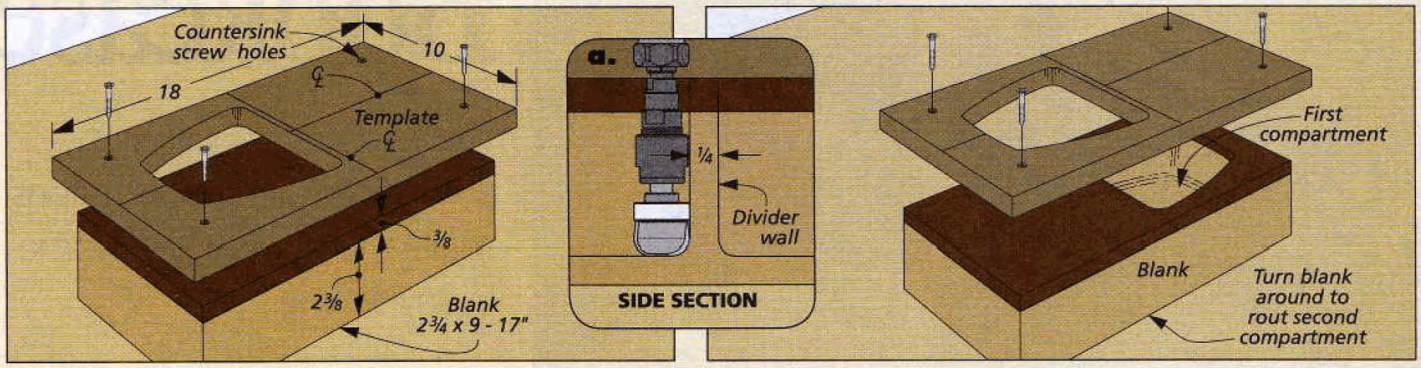

Large Round Bowl

Adding contrasting wood to the rim, as shown in the photo at right, enhances the appearance of the bowl. You can conserve stock by gluing wood staves to the blank around the rim (drawing below). Then lay the template over the strips and rout out the inside (detail 'a').

Another thing you'll quickly encounter when making large bowls is the challenge of keeping the router from falling into the large template opening. You can solve this problem by simply cutting out only half the opening in the template (second drawing below). This way, you can rout one side, then flip the template over, and rout away the material in the other half. W

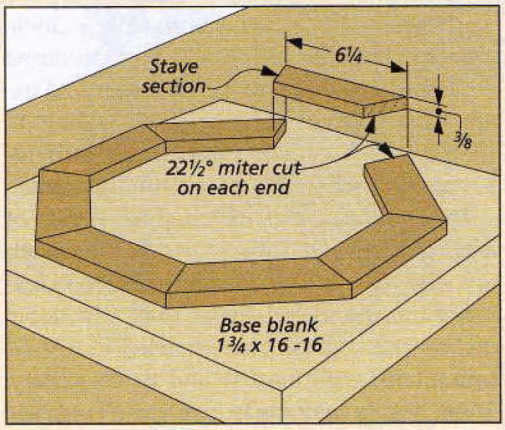

▲ A few pieces of contrasting wood mitered together adds a great look to the rim and limits the amount of stock wasted.

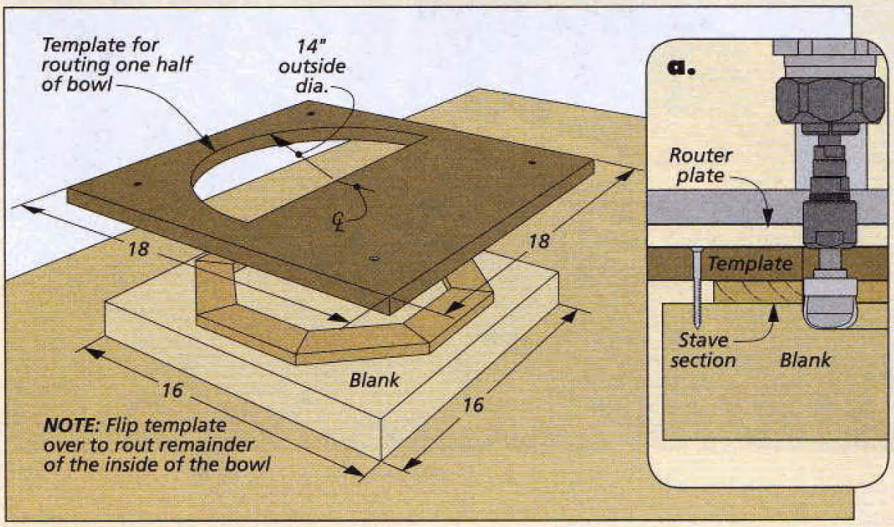

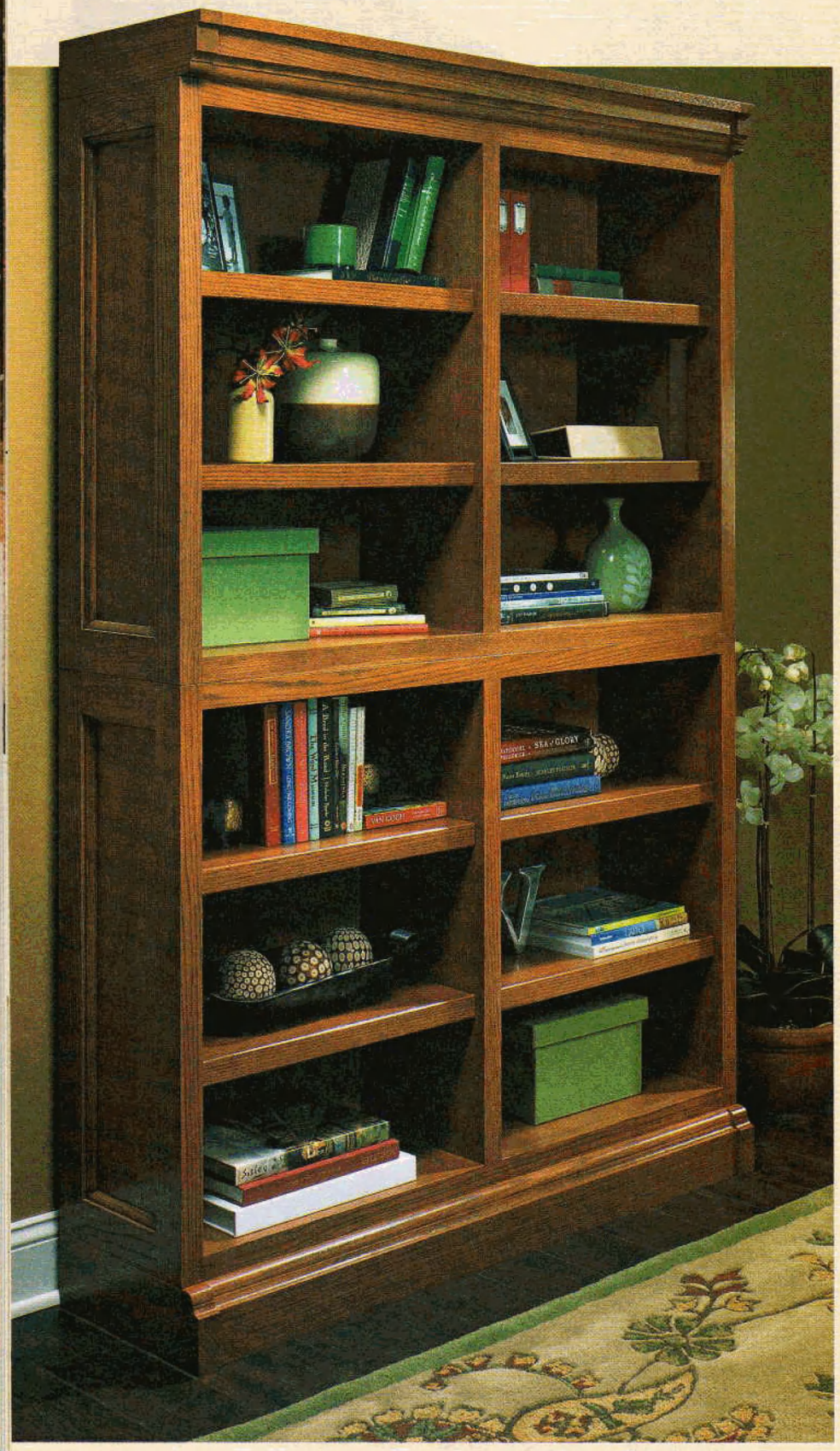

classic Modular Bookcase

Classic looks, functionality, and plenty of custom options make this bookcase at home in any setting.

I've built a lot of bookcases, usually designed for a specific room or space. The problem with this approach comes when you move or rearrange your home — they often look out of place in the new location. This time, I wanted something flexible enough to complement any room in the house.

That's the beauty of this bookcase — you can customize it for any space. The modular design allows you to build a single basic case for a small bedroom or office, or stack them up and build enough to hold your entire library. And since the molding on the sides is flush with the case, you can place them side by side.

You'll also appreciate the straightforward construction. Each case is built from a single sheet of cabinet-grade plywood and trimmed with hardwood edging (I chose oak). And the appearance of a complex crown molding on the top and base is really just stacked individual pieces, each with a simple routed profile.

To top it off, we've included the option of adding doors and drawers to take the design one step further. The dovetailed drawers feature a frame-and-panel false front. The doors incorporate a glass panel housed in a solid frame built with mortise and tenon joinery. These details combine to give you a bookcase that will look right at home in any setting.

CONSTRUCTION DETAILS

OVERALL DIMENSIONS:
47½"W x 14¾"D x 76"H

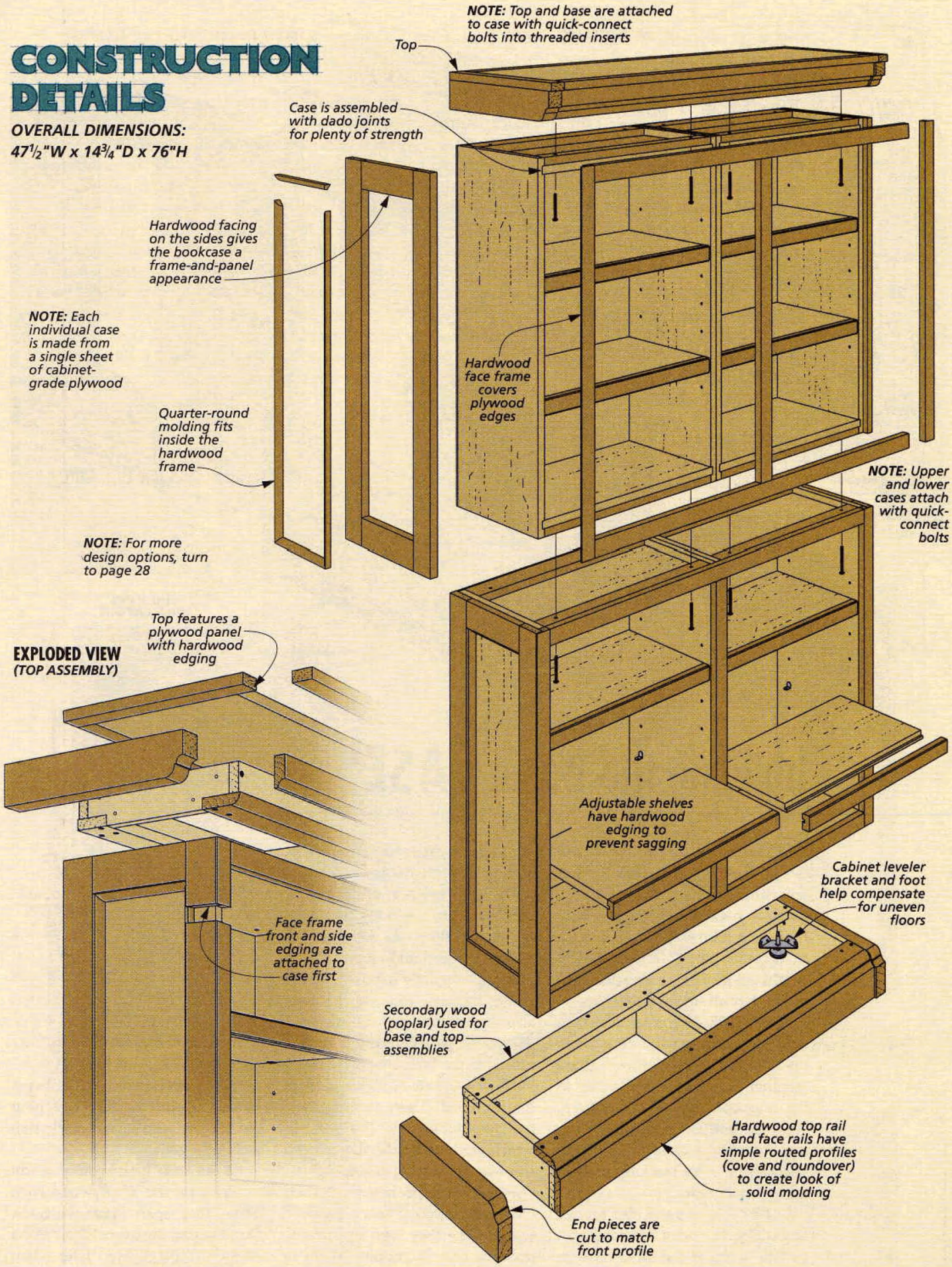

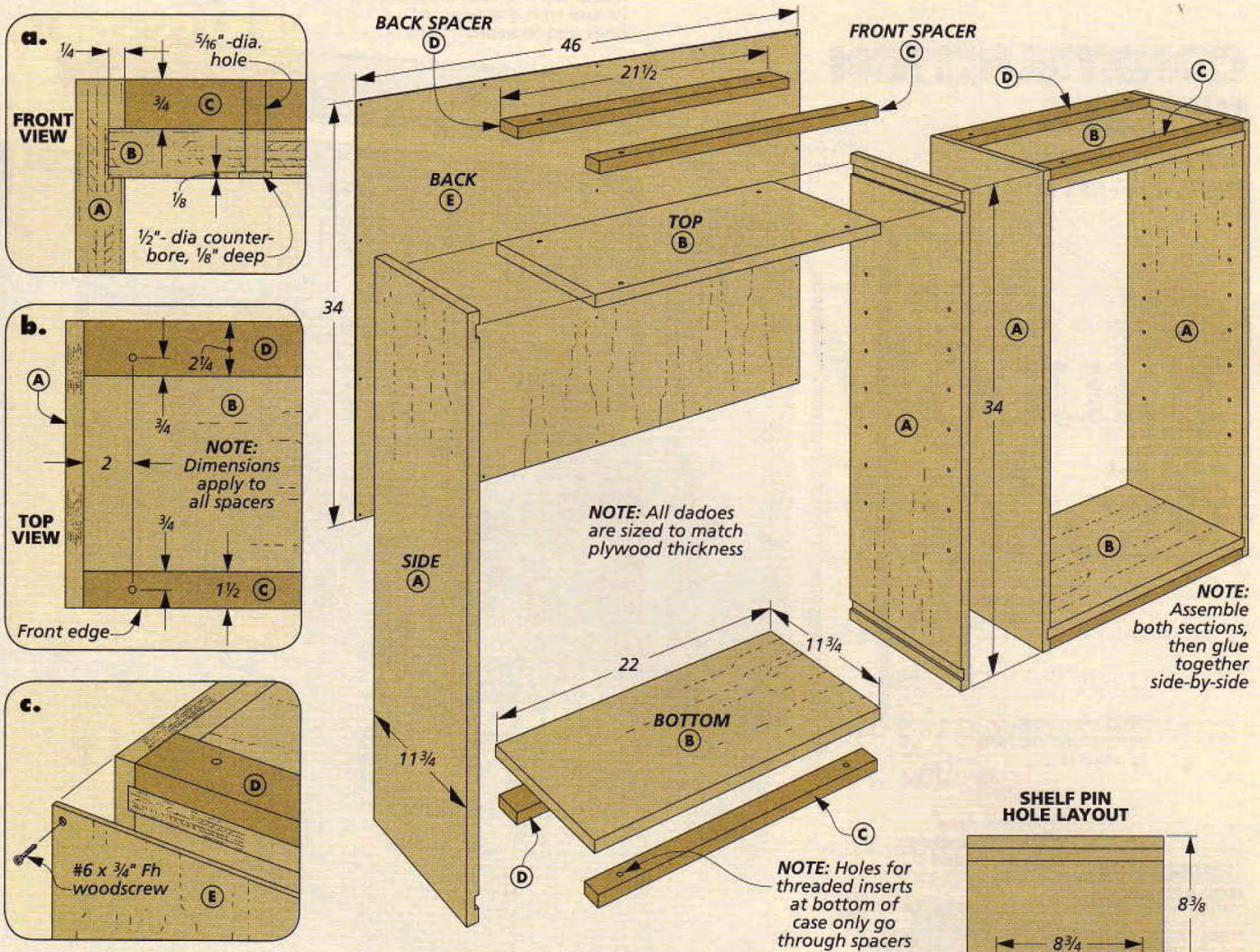

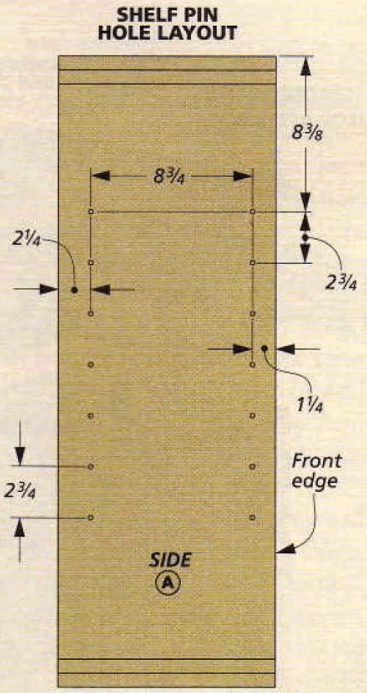

building the basic CASE

The flexibility of this bookcase design means you can add to it at any time. But if you know you're going to need several cases, you'll find it's a lot easier to build them at the same time. No matter what combination of pieces you decide to build, they all start with the case.

CONSTRUCTION. As you can see in the drawing above, each case is made up of two smaller sections glued together side by side. Dadoes in the sides hold the top and bottom. And spacers installed on the top and bottom of each section serve as anchor points for stacking or adding tops and bases.

CASE PIECES. It's a good idea to start by cutting the sides, top, and bottom to width at the same time on the table saw. This way, you can use the same rip fence setting to cut each piece to an identical width.

The next step is to drill holes for the shelf pins in the sides. The drawing at right shows the locations.

JOINERY. I used dado joints for the cases because they're not only very strong and easy to make, but they also assure proper alignment of the assembly. To cut the dadoes, I turned to the table saw and a dado blade set to match the thickness of the plywood. Then just assemble the cases with glue. The thing to remember here is to be sure to keep them square during assembly.

SPACERS. For the spacers, I used inexpensive poplar as a secondary wood, since they won't be visible once the case is complete. They're glued flush to the outside edges of the top and bottom of the cases, (details 'a' and 'b'). After attaching the spacers, you can glue the two sections together.

ADD THE BACK. Now you're ready to screw on the 1/4" plywood back panel that spans both sections. Don't worry, the exposed plywood edges will be covered later when you add the side frames.

FRAMING THE CABINET

With the case assembled, it's time to add some hardwood frames. If you take a close look at the drawings below, you'll see that the face frames cover the plywood edges on the front of the case. The side frames add a "frame-and-panel" look to the ends. The front and side frames are connected by a unique corner assembly. And that's the starting point for the trim.

CORNERS. Detail 'b' highlights the corner connection and shows how the front frame is attached to the side frame with a rabbet joint. I built these corners first so I could be sure to get a good, solid glue joint before installing them on the case. It would have been much more difficult to clamp them properly otherwise. I started by cutting both these pieces to size. Then, with a dado blade on the table saw, you can cut the deep rabbet on the front piece. Now it's a simple assembly with glue and plenty of room to clamp the pieces together.

FITTING THE FRAME. With the corners assembled, all you need to do is glue them in position. Then you can move on to completing the rest of the frame. I started by adding the rest of the pieces to the sides. Once you've glued the other trim pieces to the case, you can start attaching the quarter-round molding to the inside of the frame. I've found the best way to add molding is just to take it one piece at a time, mitering and attaching each piece individually for a perfect fit.

Next, you just add the remaining face frame pieces to the front of the case, starting with the upper and lower rails, then the center stile.

ADJUSTABLE SHELVES. The shelves complete the basic case. And they're pretty easy to make, too. You can start by cutting out the plywood shelf pieces and rabbeting the front edge of each piece. Then it's just a matter of cutting a groove in the edging pieces to match the tongue created by the rabbet (detail 'd') and gluing the pieces together.

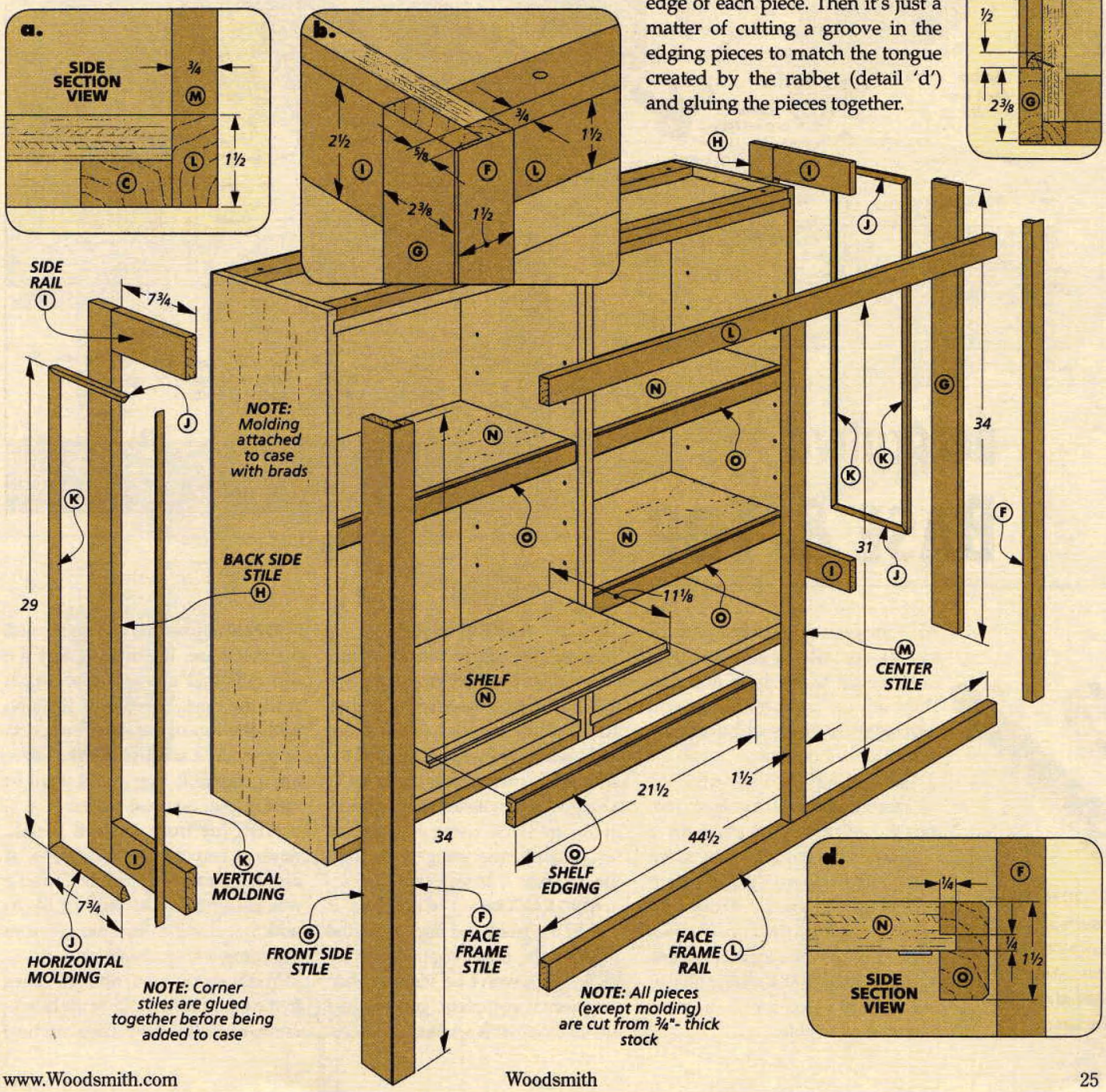

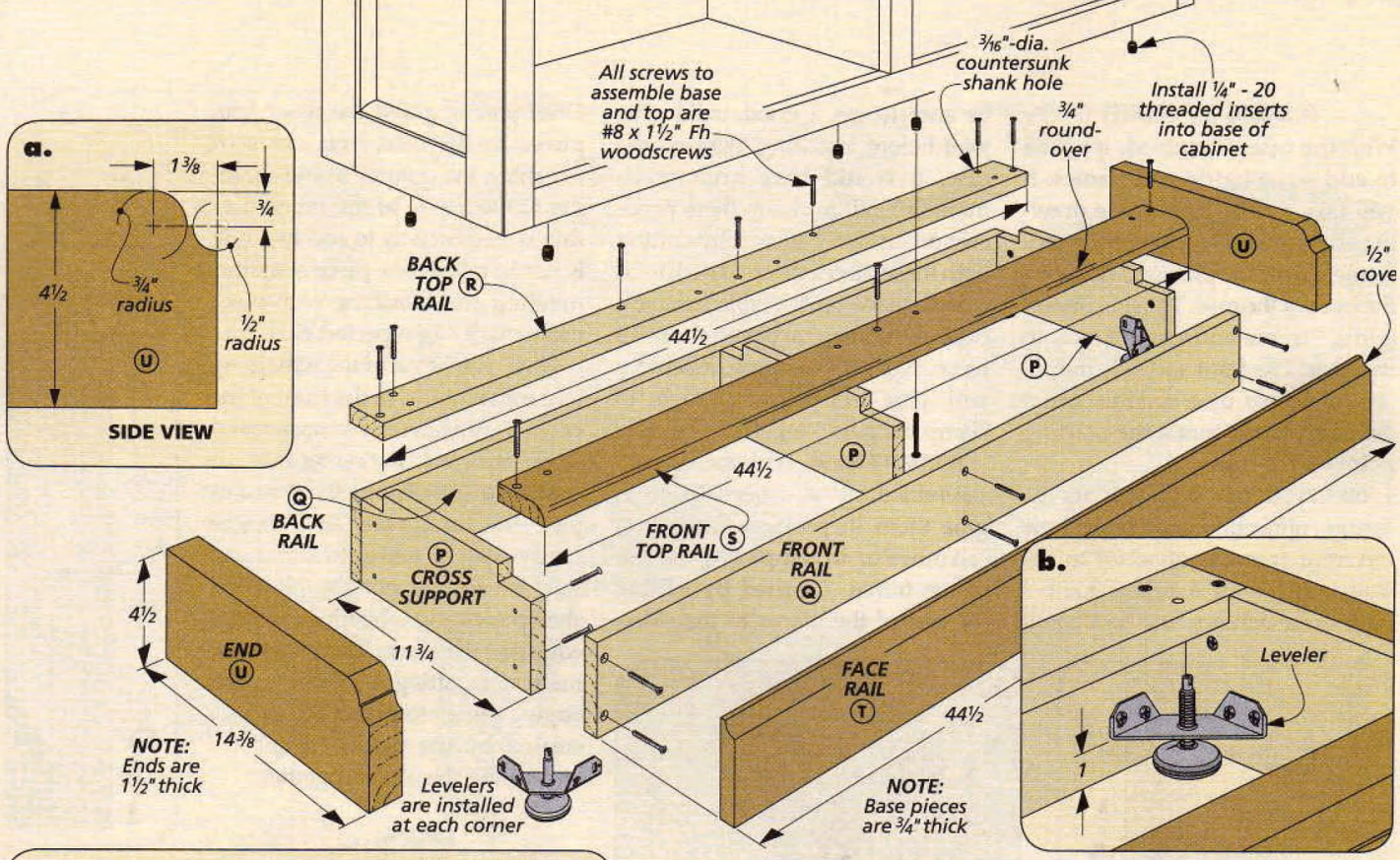

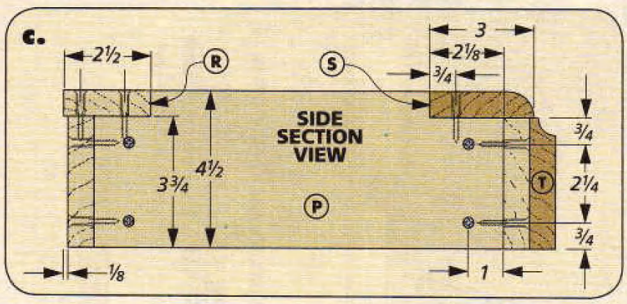

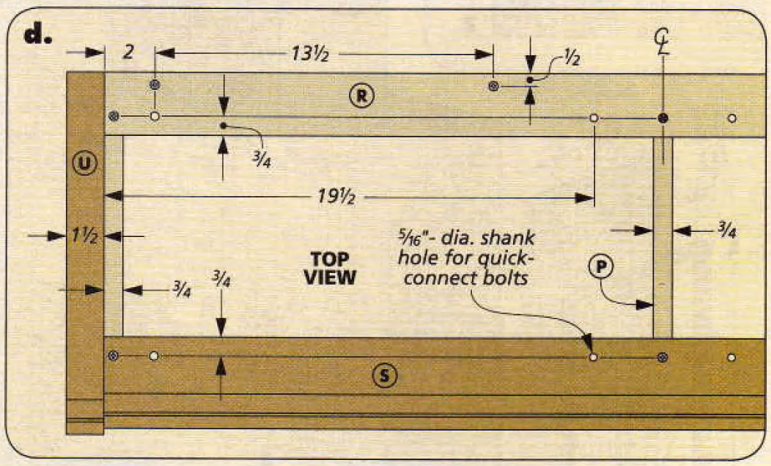

decorative BASE & TOP

▲ ¼"-20 threaded inserts and quick-connect bolts attach the base and top to the case.

With the cases assembled and the frames installed, you're ready to move on to the base and top. The built-up front moldings and matching side pieces add an elegant profile to the bookcase.

Assembling the base and top isn't too complicated either. In fact, they're just about mirror images of each other. Except for a few minor size changes, the only real difference is the top adds a panel with oak edging, but the construction method is the same for both pieces. And once again, I used poplar as a secondary wood for all the parts that weren't visible.

A STURDY BASE

As you can see in the drawings above, there are three cross supports that tie the base assembly together. To make the notches on the front and back of each support, I used the table saw with a dado blade set to a height that matches the thickness of the rail stock. Using an auxiliary fence on the miter gauge to back up the cuts prevents tearout.

FRONT & BACK RAILS. The next step is to add the front and back rails that connect the cross supports. Since these parts won't be visible when the piece is complete, you can just attach them with screws.

TOP RAILS. Now that you've formed a stable base, it's time to add the top rails that allow you to attach it to the case. These rails fit flush with the top of the cross supports to provide a solid platform. There are a couple things you'll want to take note of on these pieces.

First, the front top rail is oak. And, as you can see in detail 'b,' it also has a rounded profile. I used a roundover bit at the router table to add that detail to this piece before attaching it to the base.

You'll also want to note the holes in the top rails for adding the quick-connect bolts. This construction

method allows you to detach the base and reconfigure the bookcase at a later date. The threaded inserts fit into the spacers on the case, and the quick-connect bolts fit through a shank hole drilled through the top rails of the base.

All you need to do is drill the holes for the inserts and bolts according to the layout in detail 'd.' Then attach the top rails to the cross supports with a little glue and screws.

FACE RAIL & ENDS. With the structure complete, you're ready to move on to the hardwood face and ends. Both pieces need a little work before you can add them to the base.

The top edge of the face rail has a decorative cove profile that I made at the router table. It's a good idea to make this cut in two shallow passes to avoid burn marks.

The ends are cut to match the combined profile of the top and face rails. You can cut the matching shape at the band saw and then sand it smooth. Now just attach the face and ends using glue and screws from the inside of the base.

LEVELER BRACKETS. The last step is to add the leveler brackets to the base. These allow you to adjust the position of the bookcase to compensate for floors that may not be completely level. Detail 'c' on the opposite page shows how these fit on the inside of the base.

THE MATCHING TOP

As I mentioned earlier, the top is built the same way as the base. The thing to keep in mind here, however, is the slight difference in the dimensions of the individual pieces. You'll also notice that the threaded inserts are installed in the top rather than the case, and the bolts fit in counterbored holes on the inside of the case (detail 'b'). Other than that, the only major difference is the addition of the top panel.

TOP PANEL. The top panel is plywood with hardwood edging. The edging also adds another element to the profile of the molding. To make the top, you can start by cutting the plywood panel. Then it's just a matter of adding the hardwood trim to the edges and gluing the frame to the top assembly.

That completes the bookcase. But the next few pages will show you how you can customize it to suit your needs by adding doors and drawers to the basic design.

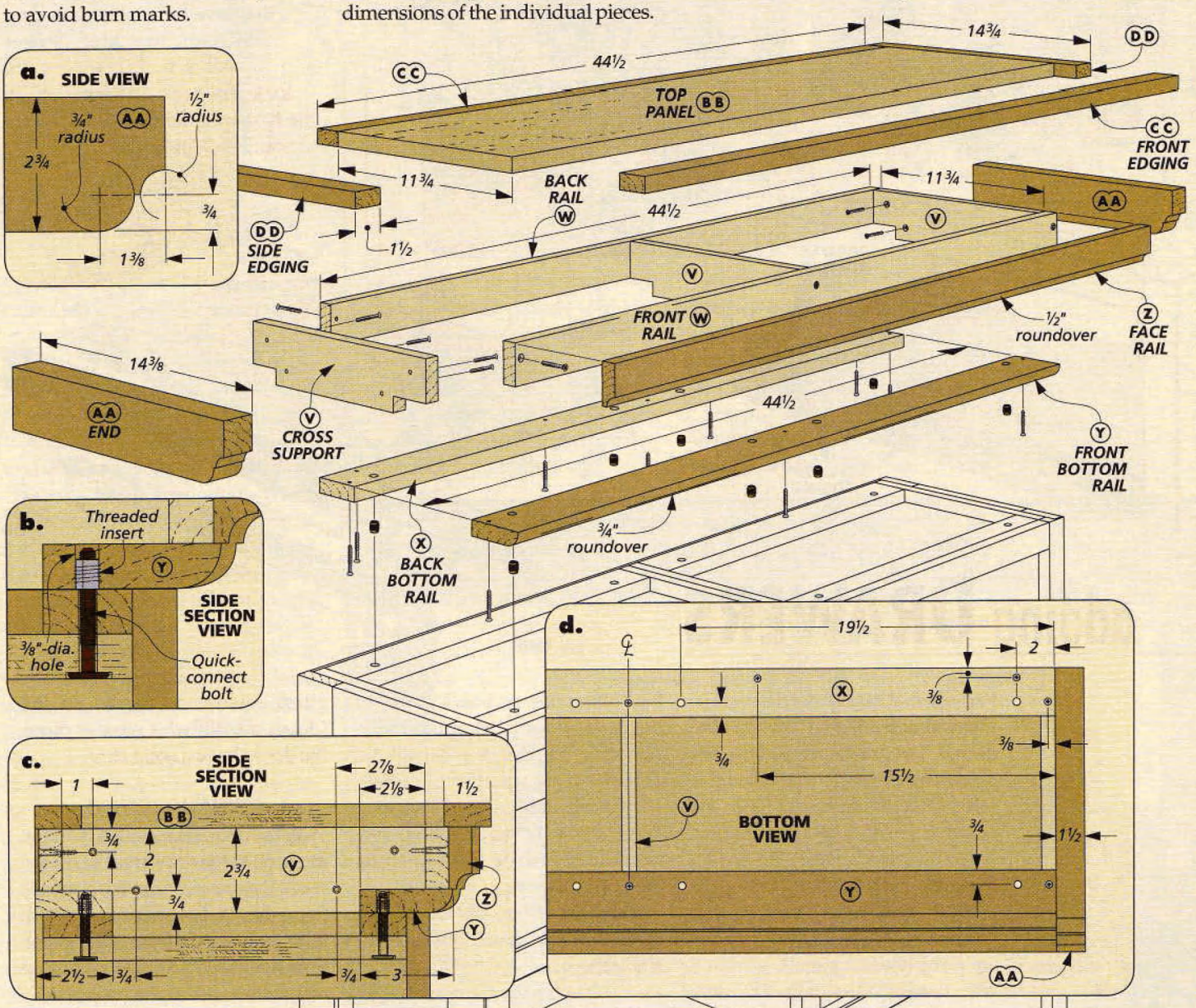

optional Doors & Drawers

Adding doors and drawers to the bookcase dramatically changes the look, as you can see in the photos on the cover and at left. In addition to providing closed storage, they really accent the frame-and-panel look of the sides. Another nice thing about this design is the drawers are mounted on runners attached to a removable divider, so the drawer unit can be added later, even after you've completed the bookshelf.

The doors are pretty straightforward frame and panel construction, and I chose to use glass instead of a wood panel. Retainer clips hold the glass in place and make it easier to replace in case of an accident. You'll also like the no-mortise hinges that save time when installing the doors. Matching drawer and door pulls complete the look. For more information on the hardware for this project, refer to Sources on page 49.

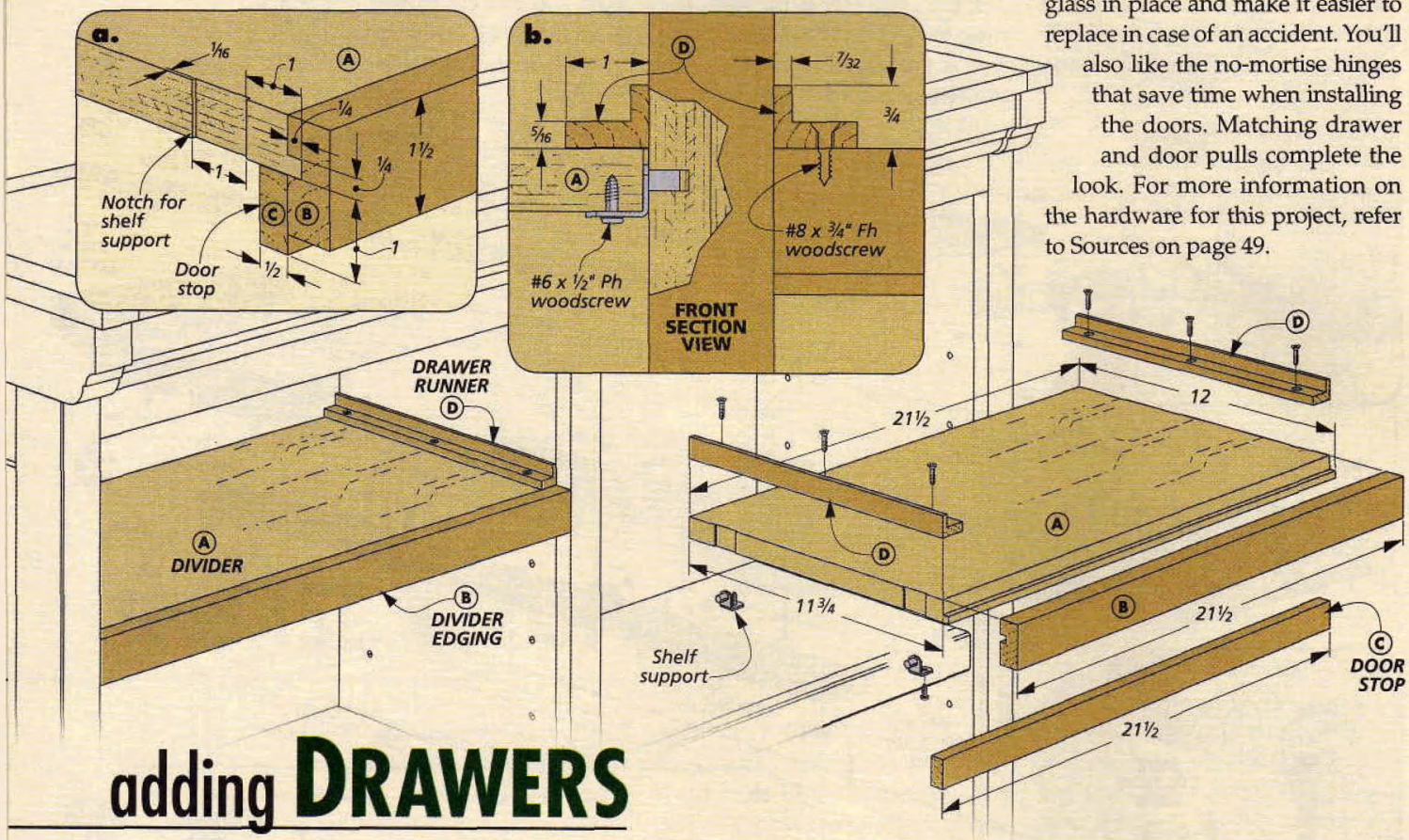

adding DRAWERS

Part of what makes the drawers so interesting is the way they're supported. The drawer slides on a pair of hardwood runners attached to a removable divider, as shown in the drawing above. A stop for the doors is also incorporated into the divider assembly (detail 'a').

DIVIDER ASSEMBLY. Like the shelves in the bookcase, the drawer dividers are just plywood panels, trimmed with hardwood edging. The only big difference is you'll need to notch the sides to accept the shelf supports, as shown in detail 'a.' Then it's just a matter of cutting out the runners and fastening them to the shelves. An easy way to make the runners is shown on the opposite page.

DOOR STOP. If you decide to add the doors as well, you'll need to include the door stop to the divider assembly. It's just a hardwood strip glued behind the divider edging (detail 'a'). With this piece in place, the doors have a solid stop.

DOVETAILED DRAWERS

With the dividers installed, you can move on to the drawers. As you can see in the drawings on the opposite page, they're dovetailed boxes with false fronts. The frame-and-panel front has quarter-round molding, to match the sides of the bookcase.

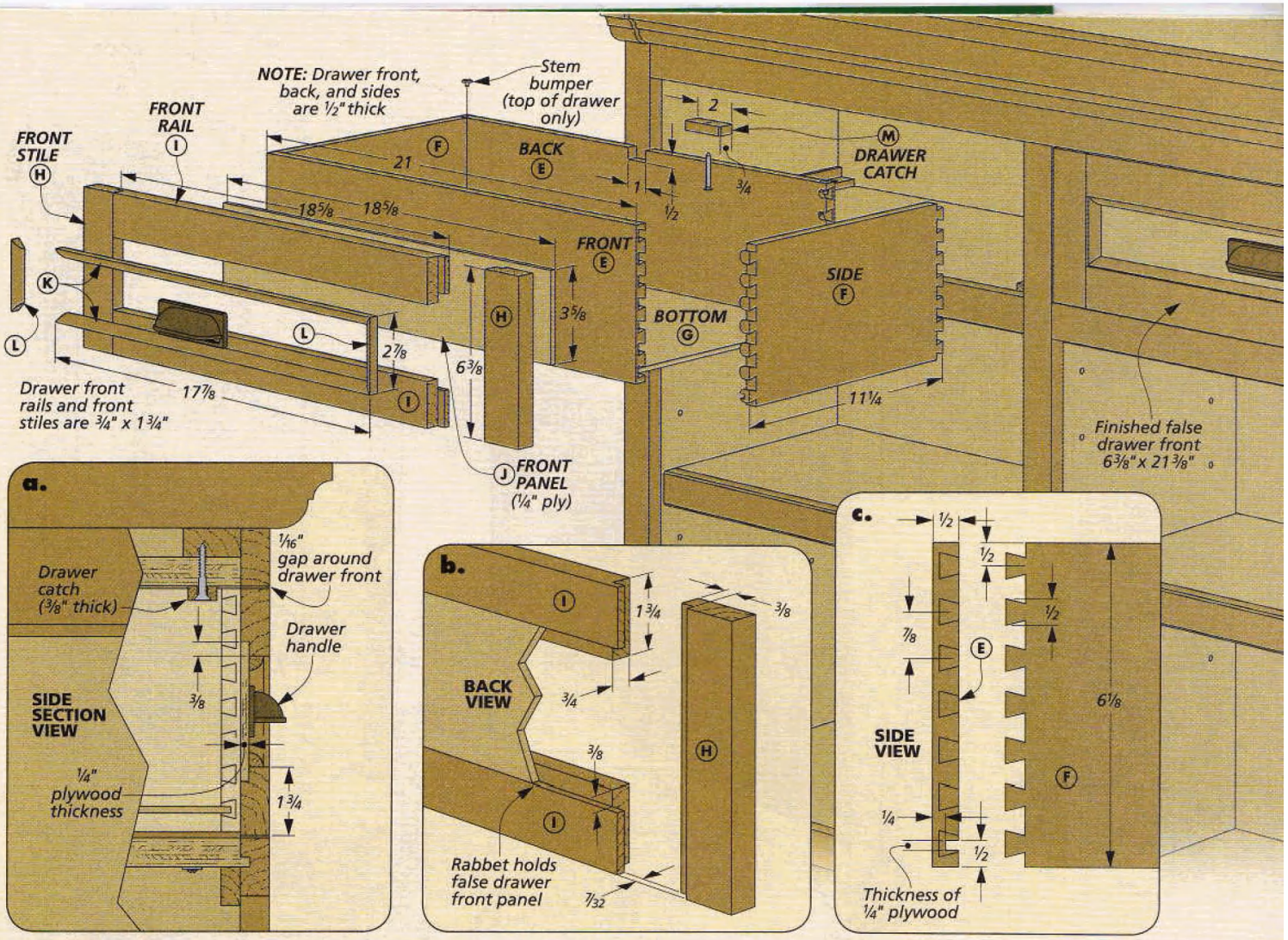

DOVETAILED DRAWER BOX. To cut the half-blind dovetails, you can use a router and a dovetail jig. And once again, I used inexpensive poplar for the drawer boxes since they'll be covered by the false fronts.

After cutting the joinery, it's back to the table saw to cut the groove for the 1/4" plywood bottom. While you're there, it's also a good time to cut a notch for the drawer stop on the drawer back. Then you can glue up the drawers and add bumpers on the back corners.

FALSE FRONT. Although the drawer fronts look a lot like the side panels of the bookcase, they're built a little differently. They incorporate a 1/4"-thick plywood panel in a rabbet on the rails and stiles, as shown in detail 'b' above. A tongue cut on the rails also fits in the rabbet on the stiles, keeping the joinery simple.

I cut the rabbets at the table saw using a dado blade and auxiliary fence. You'll find it works best to cut the long rabbet on the inside of the frame pieces first. Then you can raise the blade and use the miter gauge to support the cut forming the tongue on the end of each rail.

MOLDING. I used the same technique for adding the molding as I did on the side panels. I fit each piece individually, making sure the miters were tight throughout.

DRAWER PULL AND STOP. The drawer stop is a piece of hardwood attached to the inside of the case (detail 'a'). Turning the stop to fit through the slot in the drawer back allows you to remove the drawer. Now you can attach the drawer pull with machine screws from the inside.

How-To: Cutting Drawer Runners

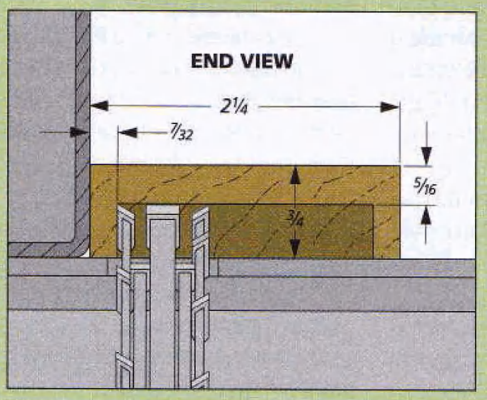

Cut a Wide Groove. *With a dado blade set to full width, cut the groove. Then, turn the stock end-for-end and repeat the cut.*

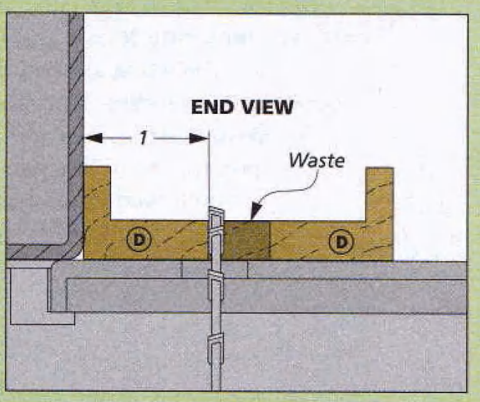

Separate the Pieces. *Set the rip fence and cut the runners to width. Sanding and some wax will make the drawers run smoothly.*

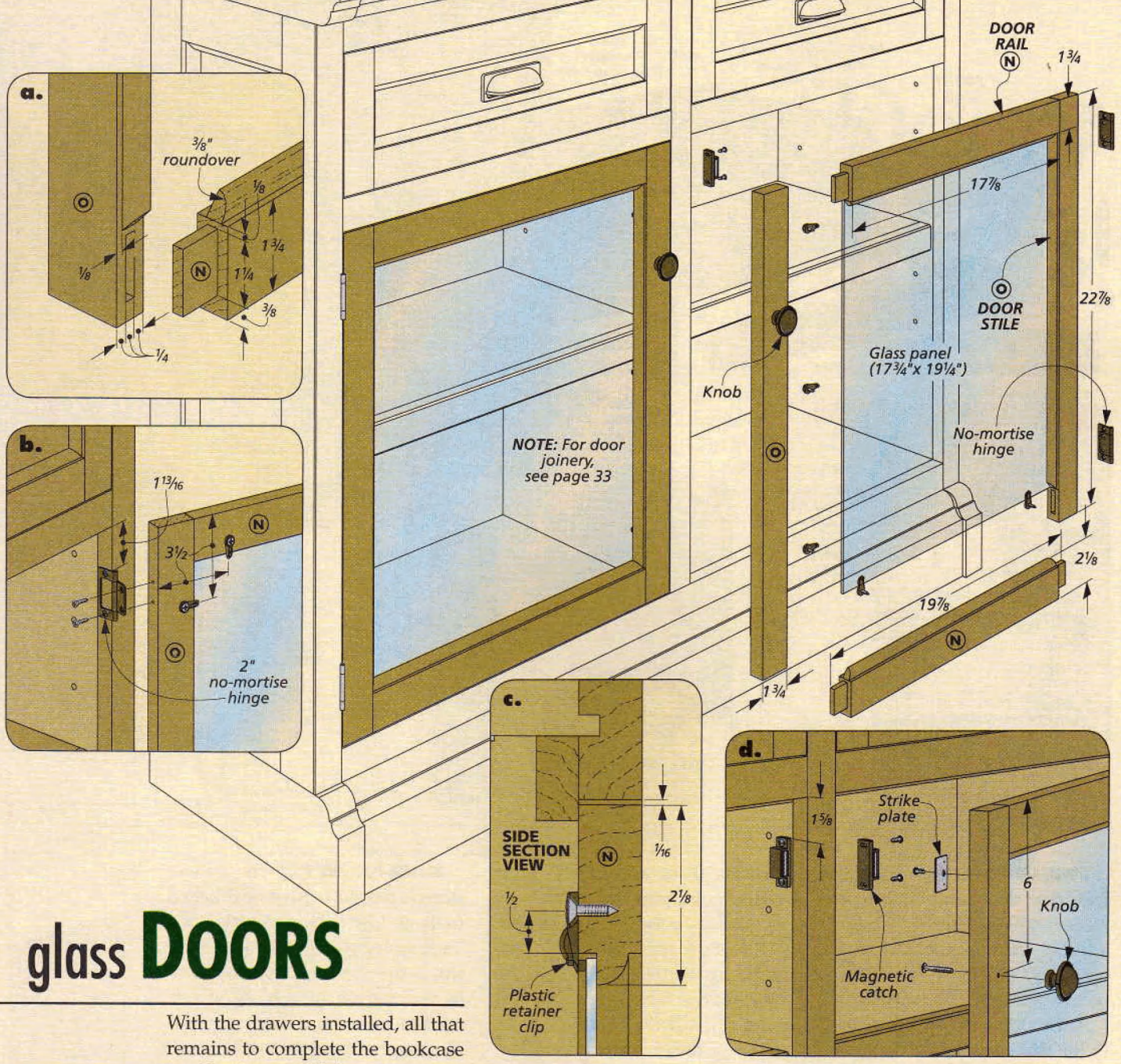

glass DOORS

With the drawers installed, all that remains to complete the bookcase are the glass panel doors.

PROFILED EDGES. Like the drawers, the doors feature a quarter-round profile to match the sides (detail 'a'). But here, I did things a little differently. Rather than applying a molding, I routed the profile on the rails and stiles. This way, you'll get a more stable door and better support for the glass panel.

You'll need to cut the profile and the rabbet for the glass before making any joinery cuts. That means a trip to the router table. I used a 3/8" roundover bit to form the quarter-round molding profile. Then just cut the rabbet on the opposite side.

MORTISE & TENON JOINERY. It's no secret that a pane of glass is more delicate than a wood panel. For that reason it's important to build a door frame that provides as much support as possible. That's why I used mortise and tenon joinery.

To get started, you'll need to first square the stock on the ends by cutting back the rounded profile at the table saw. For a details on making this joint and the miters, refer to Shop Notebook on page 33.

Once you've completed the joinery, you can glue up the doors. Then, secure the glass by using plastic retainer clips.

ADD THE HARDWARE. Now all you have left to do is attach the doors. The magnetic catches, strike plates, and door knobs are pretty straightforward. You can attach them as shown above. But the no-mortise hinges can be a little tricky.

An easy way to align the hinges is to place the door in the frame and shim it into position with thin spacers. (I often stack a few playing cards to get the position just right.) Then, mark the hinge location on the door and frame. Now you can attach the hinge to the door first, and then to the case at the location you marked. The key here is to use a self-centering bit to drill the pilot holes and keep the hinge on the mark.

No matter what options you choose, this modular bookcase can be arranged to suit just about any location. It's sure to be a piece that will provide years of service. W

Basic Cabinet Materials, Supplies, & Cutting Diagram

A	Case Sides (4)	3/4 ply. - 11 3/4 x 34
B	Case Top/Bot. (4)	3/4 ply. - 11 3/4 x 22
C	Front Spacers (4)	3/4 x 1 1/2 - 21 1/2
D	Back Spacers (4)	3/4 x 2 1/4 - 21 1/2
E	Case Back (1)	1/4 ply. - 34 x 46
F	Front Frame Stiles (2)	3/4 x 1 1/2 - 34
G	Side Front Stiles (2)	3/4 x 2 3/8 - 34
H	Side Back Stiles (2)	3/4 x 2 1/4 - 7 3/4
I	Side Rails (4)	3/4 x 2 1/2 - 34
J	Side Molding Horz. (4)	1/2 x 1/2 - 7 3/4
K	Side Molding Vert. (4)	1/2 x 1/2 - 29
L	Face Rails (2)	3/4 x 1 1/2 - 44 1/2
M	Face Center Stile (1)	3/4 x 1 1/2 - 31
N	Shelf Panel (4)	3/4 ply. - 11 1/8 x 21 3/8
O	Shelf Edging (4)	3/4 x 1 1/2 - 21 3/8
P	Base Cross Supports (3)	3/4 x 4 1/2 - 11 3/4
Q	Base Frt./Bk. Rails (2)	3/4 x 3 3/4 - 44 1/2
R	Base Back Top Rail (1)	3/4 x 2 1/2 - 44 1/2
S	Base Front Top Rail (1)	3/4 x 3 - 44 1/2
T	Base Face Rail (1)	3/4 x 3 3/4 - 44 1/2
U	Base Ends (2)	1 1/2 x 4 1/2 - 14 3/8
V	Top Cross Supports (3)	3/4 x 2 3/4 - 11 3/4
W	Top Frt./Bk. Rails (2)	3/4 x 2 - 44 1/2
X	Top Back Bot. Rail (1)	3/4 x 2 1/2 - 44 1/2
Y	Top Front Bot. Rail (1)	3/4 x 3 - 44 1/2
Z	Top Face Rail (1)	3/4 x 2 - 44 1/2
AA	Top Ends (2)	1 1/2 x 2 3/4 - 14 3/8
BB	Top Panels (1)	3/4 ply. - 11 3/4 x 44 1/2
CC	Frt./Bk. Edging (2)	3/4 x 1 1/2 - 44 1/2
DD	Side Edging (2)	3/4 x 1 1/2 - 14 3/4

- (16) 1/4" Shelf Supports
- (4) Cabinet Leveler Brackets
- (4) Cabinet Leveler Feet
- (16) 1/4" - 20 Threaded Inserts
- (8) 1/4" - 20 x 30mm Bolts
- (8) 1/4" - 20 x 50mm Bolts
- (54) #8 x 1 1/2" Fh Woodscrews
- (16) #6 x 1/2" Fh Woodscrews (Back)

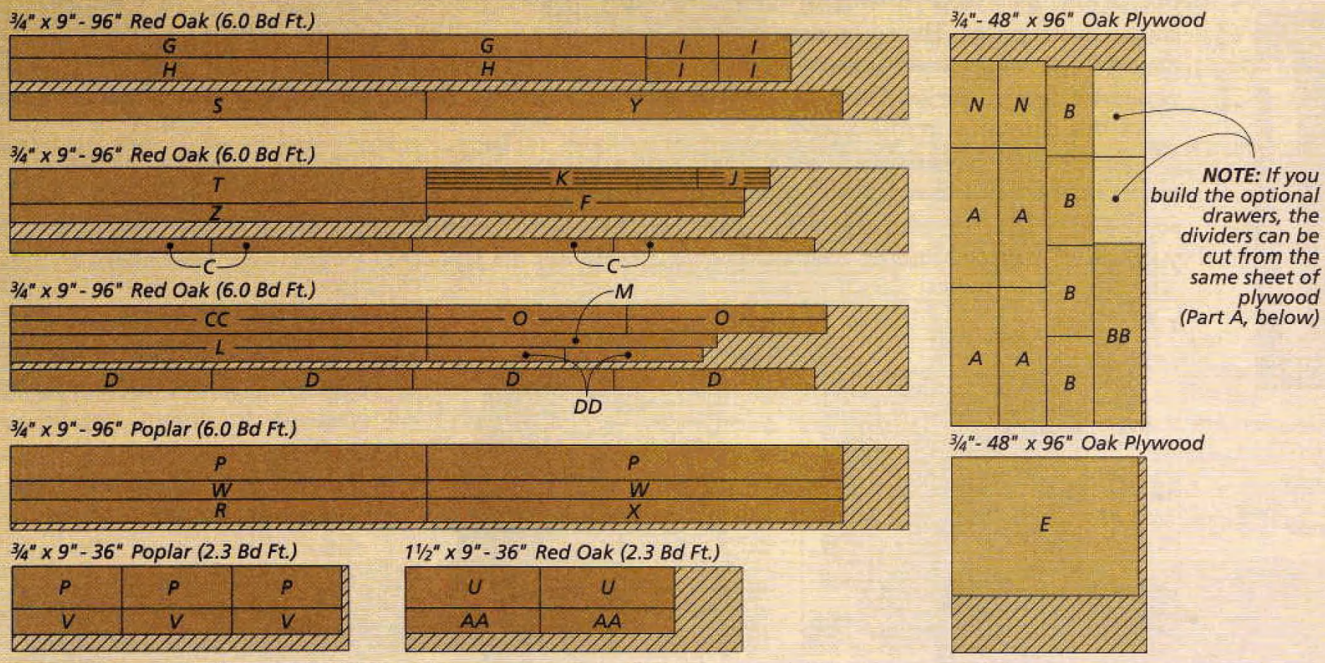

Optional Door and Drawer Materials, Supplies, & Cutting Diagram

A	Divider Panels (2)	3/4 ply. - 12 x 21 1/2
B	Divider Edging (2)	3/4 x 1 1/2 - 21 1/2
C	Door Stops (2)	1/2 x 1 - 21 1/2
D	Shelf Runners (4)	3/4 x 1 - 11 3/4
E	Drawer Frt./Bk. (4)	1/2 x 6 1/8 - 21
F	Drawer Sides (4)	1/2 x 6 1/8 - 11 1/4
G	Drawer Bottoms (2)	1/4 ply. - 11 x 20 1/2
H	Drawer Front Stiles (4)	3/4 x 1 3/4 - 6 3/8
I	Drawer Front Rails (4)	3/4 x 1 3/4 - 18 5/8
J	Drwr. Frt. Panels (2)	1/4 ply. - 3 5/8 x 11 5/8
K	Drwr. Molding Horz. (4)	1/2 x 1/2 - 17 7/8
L	Drwr. Molding Vert. (4)	1/2 x 1/2 - 2 7/8
M	Drawer Catches (2)	3/8 x 3/4 - 2
N	Door Rails (4)	3/4 - 2 1/8 x 19 7/8
O	Door Stiles (4)	3/4 - 2 1/8 x 22 7/8

- (4) Stem Bumper Glides
- (2) Bin Pulls w/ screws
- (2) 1 1/4" Mushroom Knobs
- (2 pr.) No-Mortise Hinges
- (20) Plastic Retainer Clips
- (4) Magnetic Catches
- (24) #4 x 1/2" Fh Ant. Brass Screws
- (8) #4 x 1/2" Ph Ant. Brass Screws
- (20) #5 x 1/2" Fh Woodscrews
- (16) #6 x 1/2" Fh Woodscrews
- (2) 17 3/4" x 19 7/8" Glass Panels

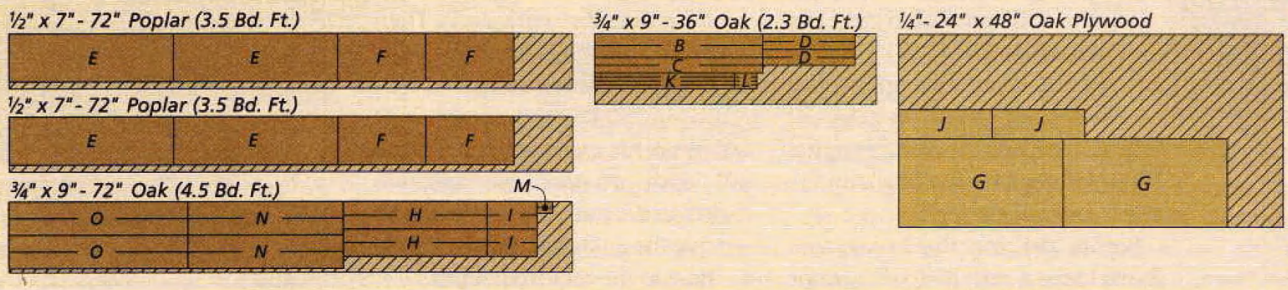

SHOP NOTEBOOK

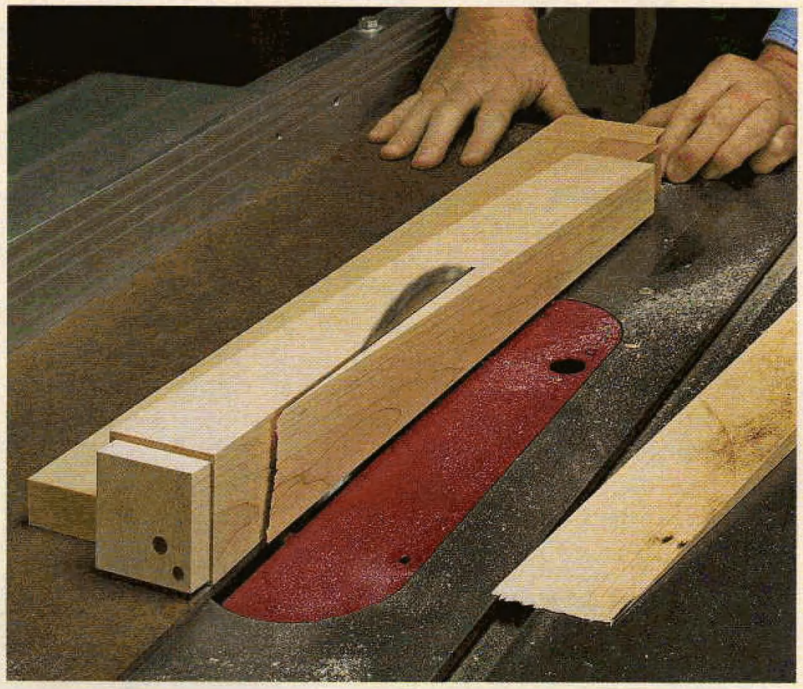

Simple Tapering Jig

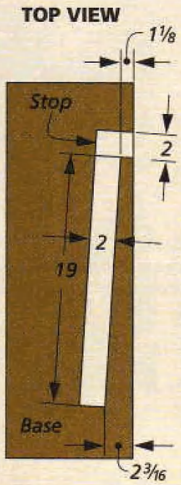

NOTE: Base of jig is 1/4" hardboard. Stop is 3/4"-thick hardwood

When it came to cutting the tapers on the legs of the desk on page 34, I put together the simple tapering jig shown in the photo. The jig holds the leg blank at the correct angle as you run it through the saw blade.

As the drawing in the margin shows, the jig consists of a hardboard base and a two-piece, L-shaped stop. The base rides against your saw's rip fence, while the stop positions the workpiece and holds it in place while cutting the taper.

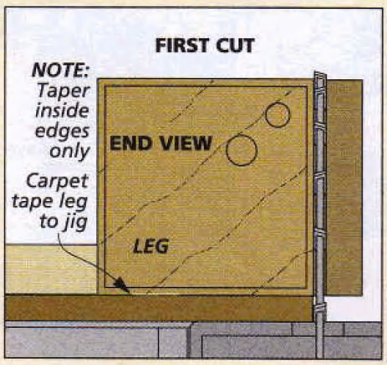

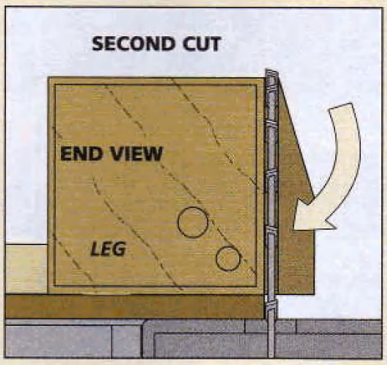

To attach the stop at the correct angle, I first laid out the taper on one of the leg blanks. Next, I set the blank on the base of the jig, so the layout marks lined up with the edges of the base. Then, I fastened the stop in place.

Once the jig is built, cutting the tapers is just a matter of using it to guide the blanks through the saw (see photo above). But because only the inside faces of the leg are tapered, you'll need to pay close attention to the sequence and orientation of the leg blank when you cut the tapers (two drawings at left).

Safety Note: Use double-sided tape to hold the blanks to the jig.

Drilling Guide

Drilling accurate holes in the end of a long workpiece can be a real challenge. So, when making the legs for the desk on page 34, I used the guide block you see here to drill the holes for the threaded rods and locating pins that will be used to attach the legs.

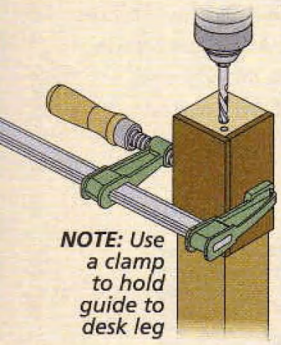

NOTE: Use a clamp to hold guide to desk leg

The first thing to do is to cut a 1"-thick block to match the top of the legs. Then, take the block to the drill press and drill the guide holes (detail 'a').

Next, you can glue two hardboard pieces on adjacent sides of the block (drawing at right). They will register the block on the inside faces of the legs.

Before drilling the holes, you should take a minute to determine which sides of the legs you want to show. Since the holes are to be drilled on the inside corners (see main drawing on page 39), their location determines which faces are seen on the outside of the desk. Once you determine the orientation of the legs, you can drill the holes.

I placed the guide on the end of the leg and clamped it in place, making sure the hardboard guides were tight to the workpiece. Then you can drill the holes with your hand drill (drawing at left).

If your drill bit for the larger hole isn't quite long enough to reach the full depth you need, use the guide to drill as deep as you can. Then just remove the guide and finish drilling the hole to the required depth.

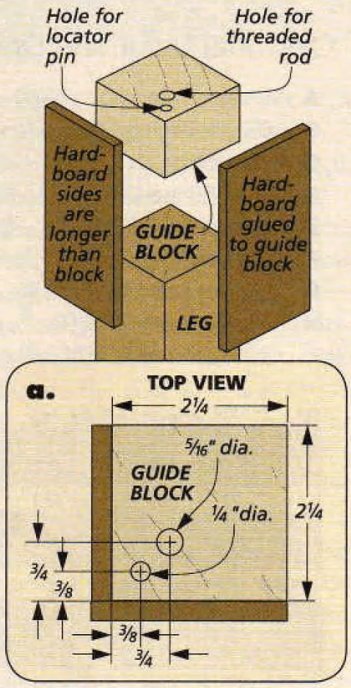

Molded Mortise & Tenon Doors

Building the molded glass-panel doors for the bookcase on page 22 is not as hard as you might think. All it takes is the simple step-by-step technique shown below.

The rails and stiles have a profile routed on the inside edge. This profile needs to be trimmed and mitered to allow for the joinery. Since the profile leaves a small shoulder on the outside face of the frame pieces, you can use this shoulder as your reference point for making the cuts. And the frame pieces should fit together perfectly.

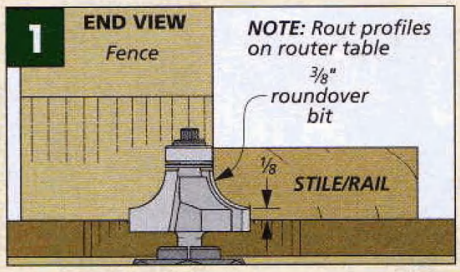

Roundover. *The first step is to rout the roundover profile. Set the height of the bit so the cut will leave a shoulder along the outside edge of each workpiece.*

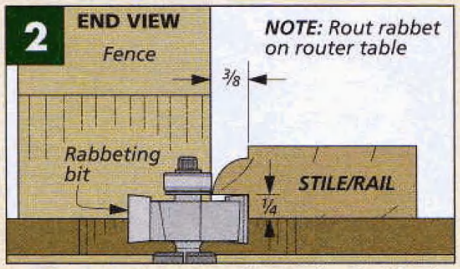

Rabbet. *To cut the rabbet that holds the glass panel, install a rabbeting bit in the router table. The depth of the rabbet should match the depth of the shoulder cut.*

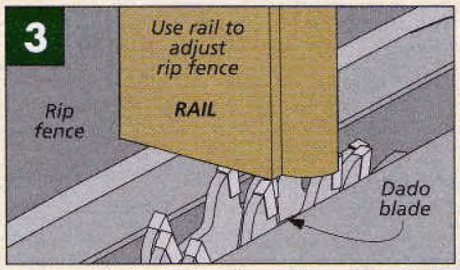

Stile Ends. *Next, you'll need to remove the molded profile at the ends of the stiles on the table saw. The shoulder of the rail is used as a guide to position the rip fence.*

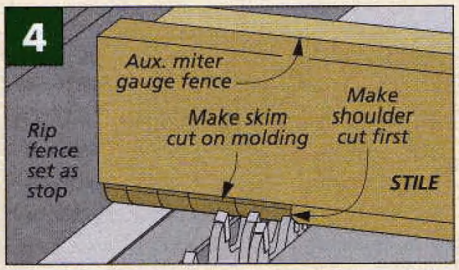

Remove Waste. *With the height of the blade set to skim under the shoulder of the roundover, remove the waste on both ends of the stiles by making multiple passes.*

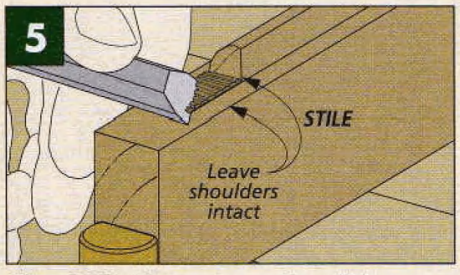

Clean It Up. *Now you can trim off the excess left by the dado blade with a chisel, working from the back of the stile. Don't pare off any of the shoulder — leave it intact.*

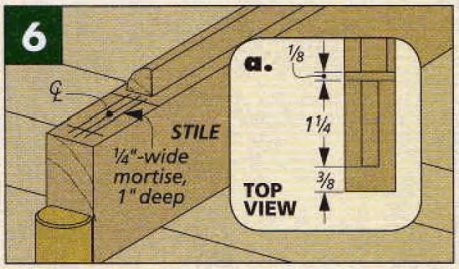

Lay Out the Mortise. *At this point, you can lay out the mortise, centered on the stile. Then drill out the mortise at the drill press and square up the ends with a chisel.*

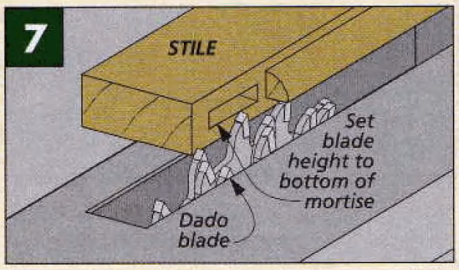

Tenon Setup. *With the mortise complete, go ahead and set up your table saw to cut matching tenons. Use the mortise to set the height of the dado blade.*

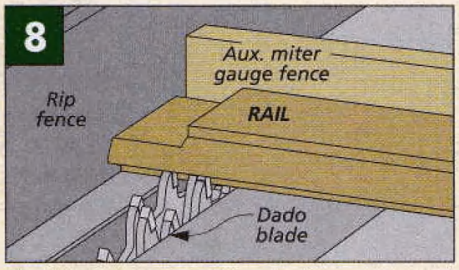

Cut the Tenons. *Set the rip fence as a stop to establish the length of the tenon. Create the tenons by removing the waste on both faces with multiple passes.*

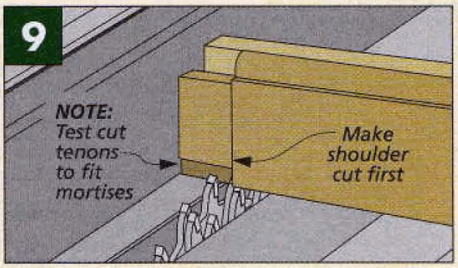

Trim the Ends. *With the fence in the same position, set the depth of cut to trim the tenon to width. Cut the tenon wide at first, and "sneak up" on final width.*

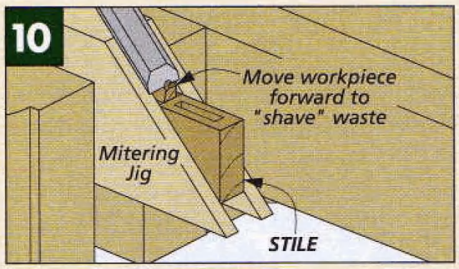

Mitering Jig. *To miter the ends of the molding, make a simple jig out of a thick piece of scrap. Cut a groove to hold the rails and stiles, and miter the end at 45°.*

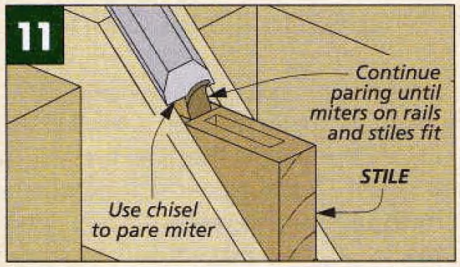

Miter the Stile Molding. *Place the stile in the jig, lining the jig up with the bottom end of the molding. Then, pare a miter on the end of the molding with a sharp chisel.*

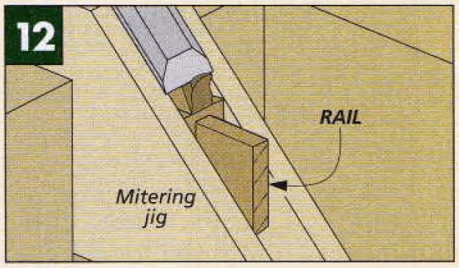

Miter the Rail Molding. *Line up the shoulder of the tenon with the mitered face of the jig. Carefully pare down the molding until the corner is also cut at a 45° miter.*

five-drawer Desk

This desk has it all — a clean, elegant look and some great woodworking all wrapped into a compact and practical package.

Some desk projects can be a bit overwhelming — too large to use and too challenging to build. But this desk is designed to be different. It's easily "do-able," both in terms of size and construction.

First, as you can see, the feel of this desk is very inviting. Its small size and elegant look allow it to fit in anywhere in your home.

And from a woodworker's standpoint, it's also a winner. The neat thing is that it all goes together in small pieces — somewhat modular. The case is actually three, small cases that are built separately and then fastened together. The legs then simply bolt to the case assembly in "knockdown" fashion. Add the eye-catching frame and panel top and the five drawers, and you're done. You'll find that it's all very manageable and easy to work on.

But don't get the idea that this project doesn't offer any challenging or interesting woodworking. You'll find that the design details will give your skills a good test as well as a nice sense of accomplishment when the job is complete.

CONSTRUCTION DETAILS

OVERALL DIMENSIONS: 54"W x 24"D x 30"H

Figured veneer top panels create focal point

Mitered and splined hardwood frame captures panels

Drawer runner

End case

Center case

End case

Pencil tray helps keep center drawer organized

***NOTE:** Case parts are ¾" plywood*

Legs are tapered on two sides

Legs are solidly bolted to case

Case side and edging are beveled to create an invisible joint

Locating pin

Locking rabbet joints used for drawer construction

Threaded rod glued into top of leg used to bolt leg to case

Contrasting cherry band creates transition between leg and case

Groove in drawer side slides over runner in case

Cherry Shaker-style knobs

***NOTE:** Desk case is assembled from three individual cases for ease of construction*

***NOTE:** Bolt-on legs simplify construction*

***NOTE:** Drawers slide on side-mount runners*

Cherry foot doweled to bottom of leg

TOP AND CASE CORNER ASSEMBLY DETAIL

Splined miters at corners of top

Tongue and groove joinery used to construct frame and panel top

Tongue and dado case construction

Beveled edging

Washer and lock nut

Threaded rod

Locating pin in top of leg keeps it in position

Leg banding

Leg

LEG/CASE ASSEMBLY DETAIL

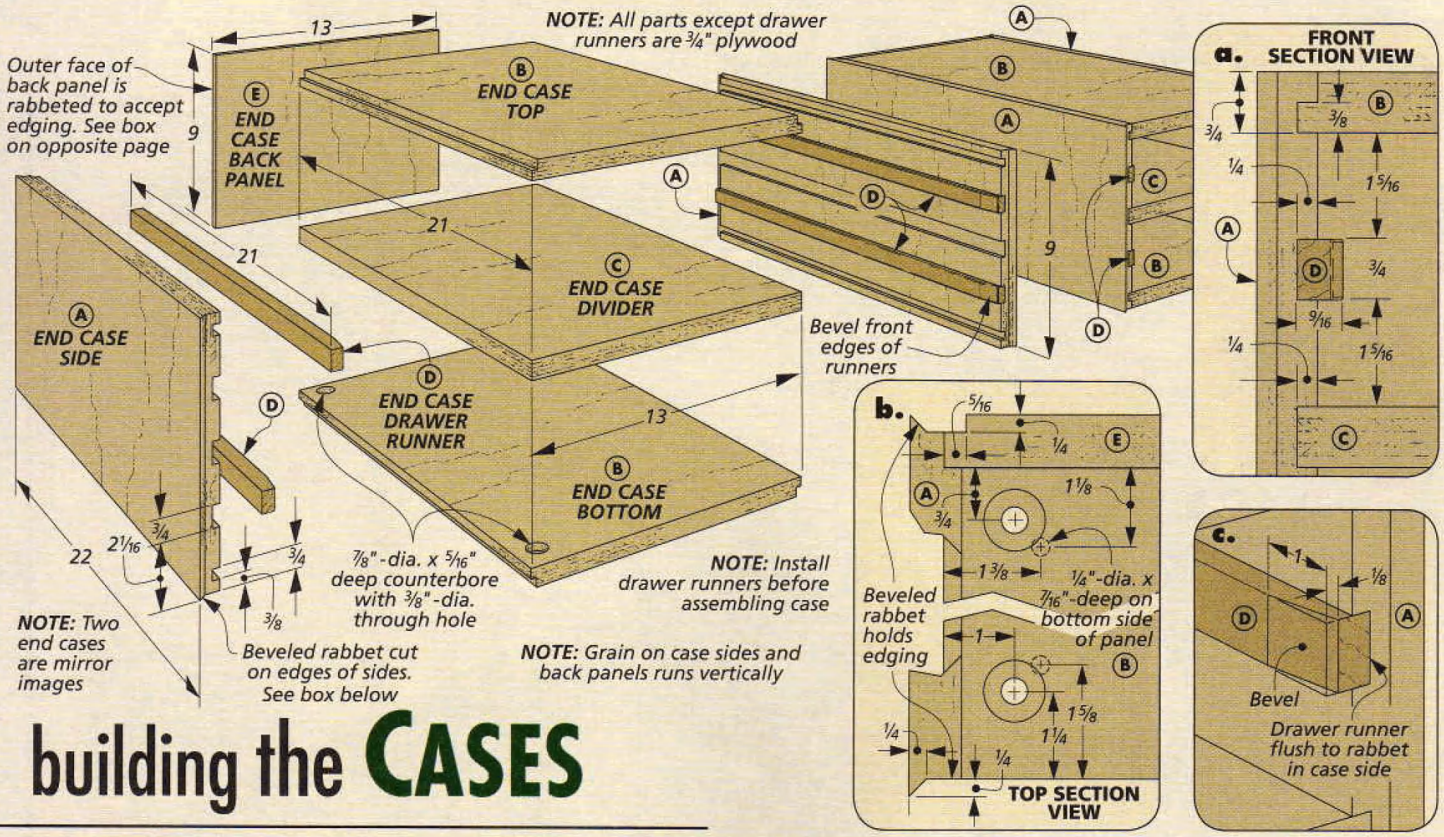

building the CASES

Building the three plywood cases that make up the case assembly is the best place to start the project. There are two, mirror-image end cases that flank a shallower center case. I started with the more involved end cases, shown above.

BEVELED EDGING. There's one detail to these two cases that needs a little advance explanation. The design incorporates a beveled edging that mates with a beveled rabbet on the front and back of the case sides. This feature serves to hide the plywood core while also hiding the fact that you've applied edging. The result is the cases have a much cleaner, seamless look. Detail 'b' above shows you how the beveled rabbet will look on the two end cases.

THE JOINERY. With this in mind, you can get started by cutting the four case side pieces to size. Note here that the grain runs vertically.

Next, you're going to give your dado blade a workout. As you can see in detail 'a,' the case sides are joined to the top and bottom with a tongue and dado. And the center divider fits into a full-width dado. Furthermore, the runners that the drawers slide on also fit into dadoes cut in the case sides.

A BEVELED RABBET. Once all these dadoes are cut, you'll need to briefly switch back to a standard blade to cut the beveled rabbets for the edging. You'll find the technique I used for this in the box below. Finally, the back edges also need a secondary rabbet that holds the ¾" plywood back panel (detail 'b' above).

TOPS, BOTTOMS, AND DIVIDERS. At this point, you can set the sides in a safe spot and turn your attention to the

How-To: A Beveled Rabbet

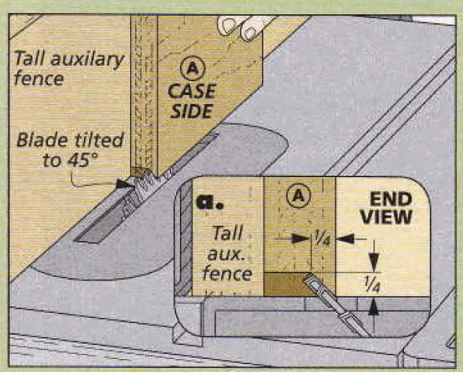

A Bevel Cut. *First, I made a 45° bevel cut with the case side standing on edge. A tall fence helps guide the workpiece.*

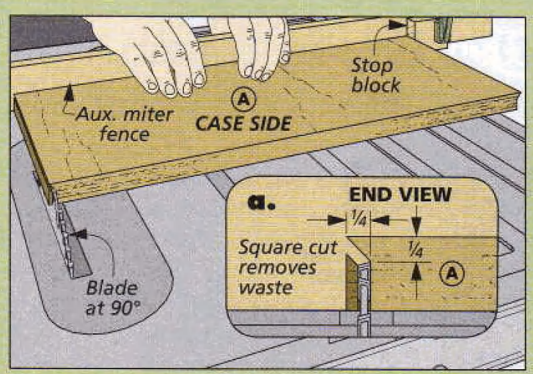

A Square Cut. *Next, I removed the waste with a square cut. A stop block clamped to an auxiliary fence will help you make the cut accurately.*

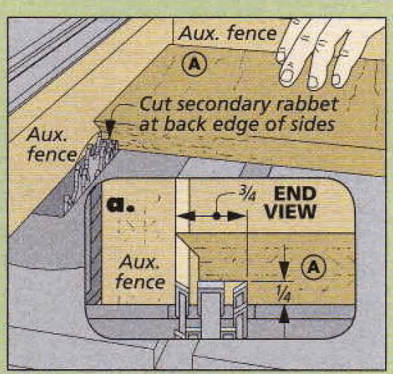

Secondary Rabbet. *I used a dado blade to cut the deeper, secondary rabbets that hold the back panels.*

tops, bottoms, and center dividers. All these parts are sized to fit flush to the front and back rabbets in the sides, as shown in detail 'b' a left. Then tongues are cut on the tops and bottoms to fit the dadoes in the case sides (detail 'a' on opposite page).

A FEW HOLES. With this joinery complete, the outside corners of the case bottoms have a pair of holes that need to be drilled (detail 'b' at left). The first is a counterbored bolt hole used to attach the leg. A second ¼"-dia. hole is drilled on the underside to hold a locating pin to help position the legs. Note that the hole locations are different at the front and back.

DRAWER RUNNERS. Now, before assembling the pieces, I made and installed the drawer runners on the case sides. It's just easier to do this beforehand. Detail 'c' on the opposite page shows how the front edges of the runners are beveled to ease the fit of the drawers.

BACK PANELS. With all these parts assembled, adding the back panels will finish up the basic casework.

The backs are sized to fit between the rabbets in the case sides and flush with the case top and bottom. And once the panels are fit, you'll need cut rabbets on all four of the outside edges. These rabbets complete the pockets that hold the edging you'll apply to the back of the case (detail 'b' on opposite page).

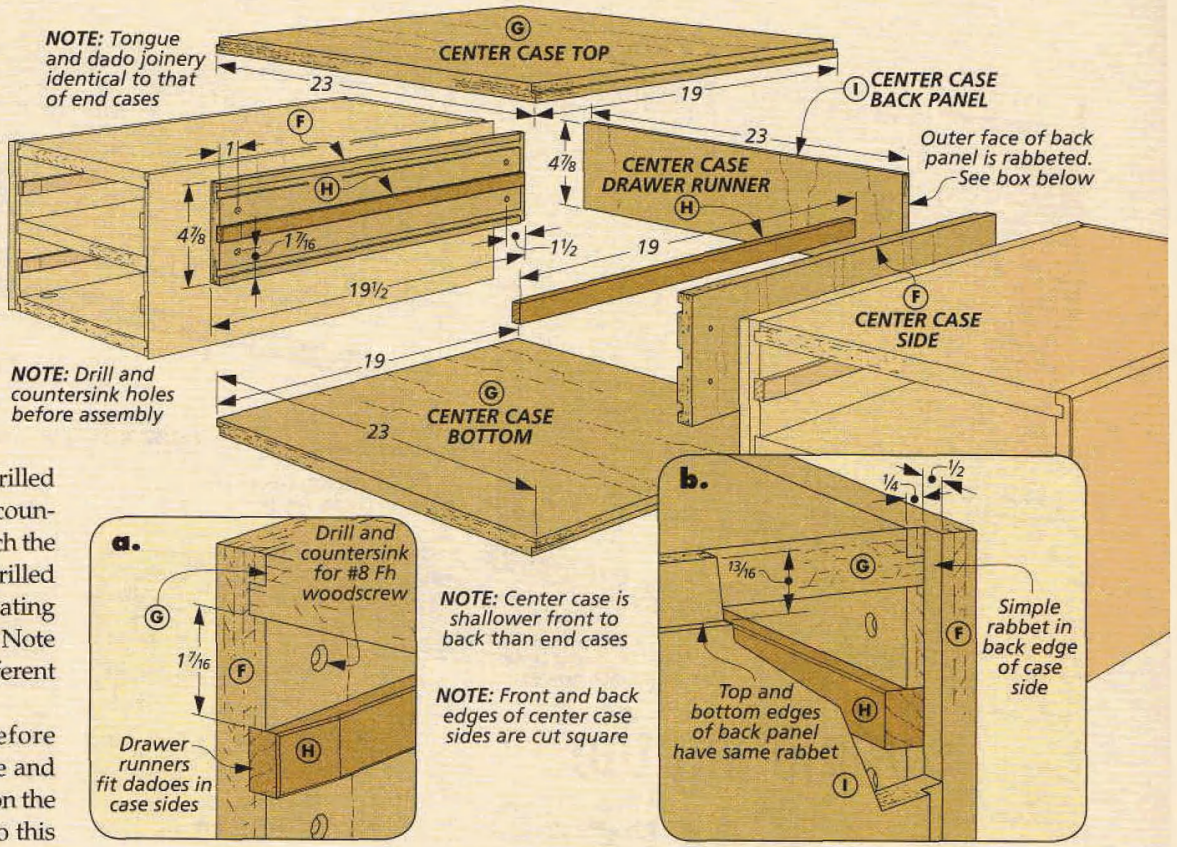

The box below gives you guidance on cutting these rabbets, but let me point out a couple of things. First, the top and bottom rabbets are a different width than those along the sides. And all the rabbets are sized to include a 1/16" shadowline that separates the edging from the back panel. When ready, the backs can be glued in place.

THE CENTER CASE. Now, building the center case, shown above, is much simpler. I won't go through the whole process, but there are a few important differences to mention.

First, note that the finished center case is two inches shallower, front to back, than the end cases. And since the sides of this case won't show, I didn't bother with beveled edging fit into a beveled rabbet (detail 'a' above). But the rabbeted back panel is fit into the case in the same way, as shown in detail 'b' above.

One last thing. The three cases will be fastened together with screws installed through the center case sides into the end cases. I drilled the countersunk holes for these screws before assembling the case.

Back Panel Rabbets

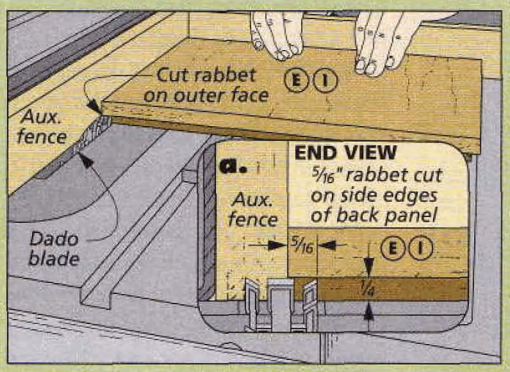

Narrow Rabbets. *A rabbet cut along the sides of the back panels will complete the pocket for the edging and create a shadowline.*

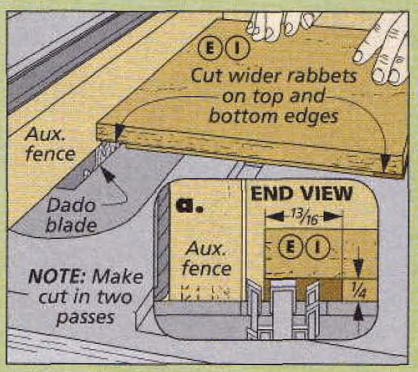

Wider Rabbets. *The top and bottom of the panels get a rabbet the full width of the edging and shadowline.*

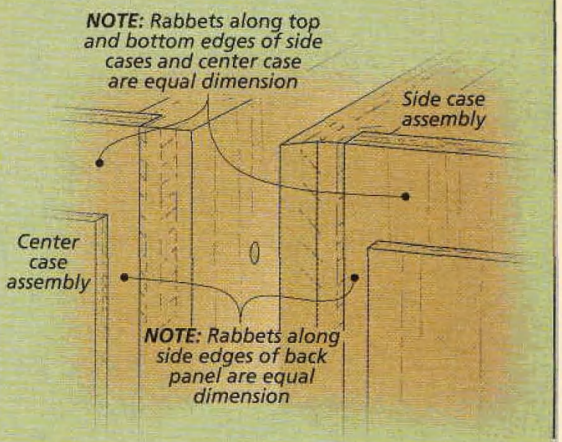

▲ Rabbets in the back panels create pockets for the edging pieces.

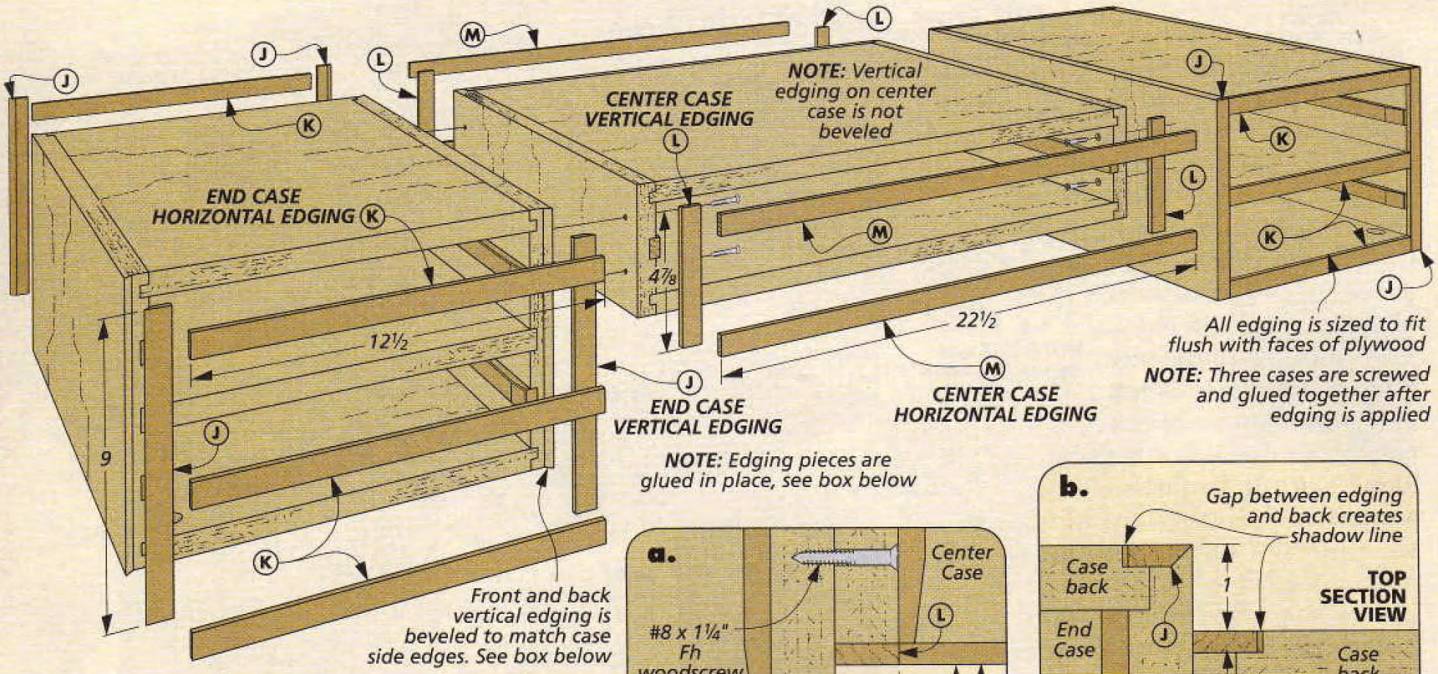

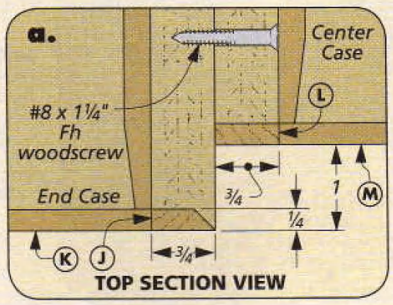

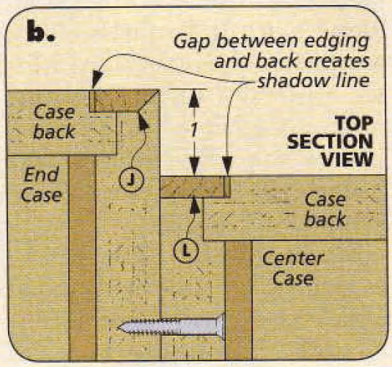

completing the CASES

At this point, most of the hard work on the three cases is done. But they still need the thin edging that completes their clean look. And once this is added, the three cases can be combined into a more "desk-like" case assembly.

END CASE EDGING. I tackled the slightly trickier end cases first. A quick look at the drawing above will show you how this edging is applied.

Both the front and the back of each case need identically sized edging. On the front, the ¼"-thick edging pieces should fit flush with the faces of the plywood (detail 'a'). At the back, the edging creates a narrow shadowline around the back panel, as seen in detail 'b.'

FIRST, BEVELED EDGING. The order of installation is the trick. The beveled, vertical, side edging comes first. Once it's fit and glued in place, adding the horizontal pieces is easy.

There are two minor challenges here. The first is making the small beveled pieces accurately, and the second is gluing them in place on the case. Both are important to giving you the seamless look you're after. The box below gives you some tips on accomplishing this.

To make this edging, I started with over-sized pieces and then used a push block to carefully bevel them to width. After cutting the pieces to length, I glued them in place, one at a time, applying clamps in both directions to pull the joint tight (main drawing in box).

When both side pieces are in place, the horizontal pieces are cut to fit between them and glued on. I found that getting a good result was just a matter of taking my time.

THE CENTER CASE. Adding the edging to the center case goes just the same. But without the beveled sides pieces or a center divider to deal with, you'll get through it a lot quicker.

ONE ASSEMBLY. That's it for the edging. The cases are now ready to be joined into one assembly. But before gluing and screwing the cases together, take a quick look at details 'a' and 'b' above. The center case should be recessed 1" from the side cases at both the front and back.

How-To: Edging

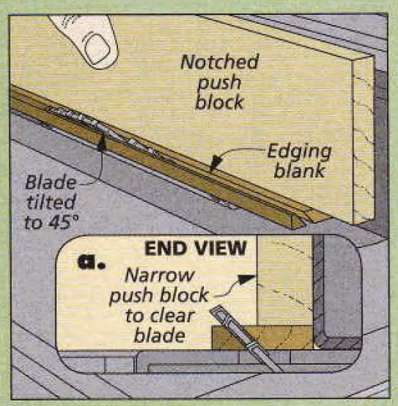

Beveled Edges. *A long, narrow push block will help you cut the bevel on the side edging pieces.*

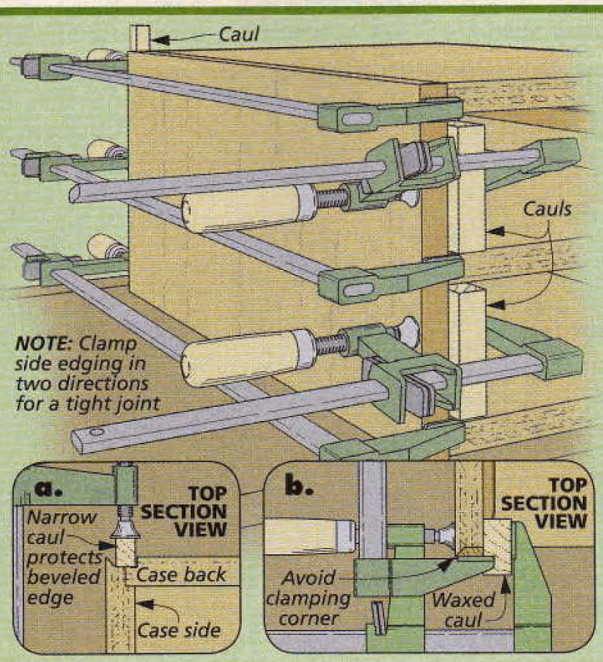

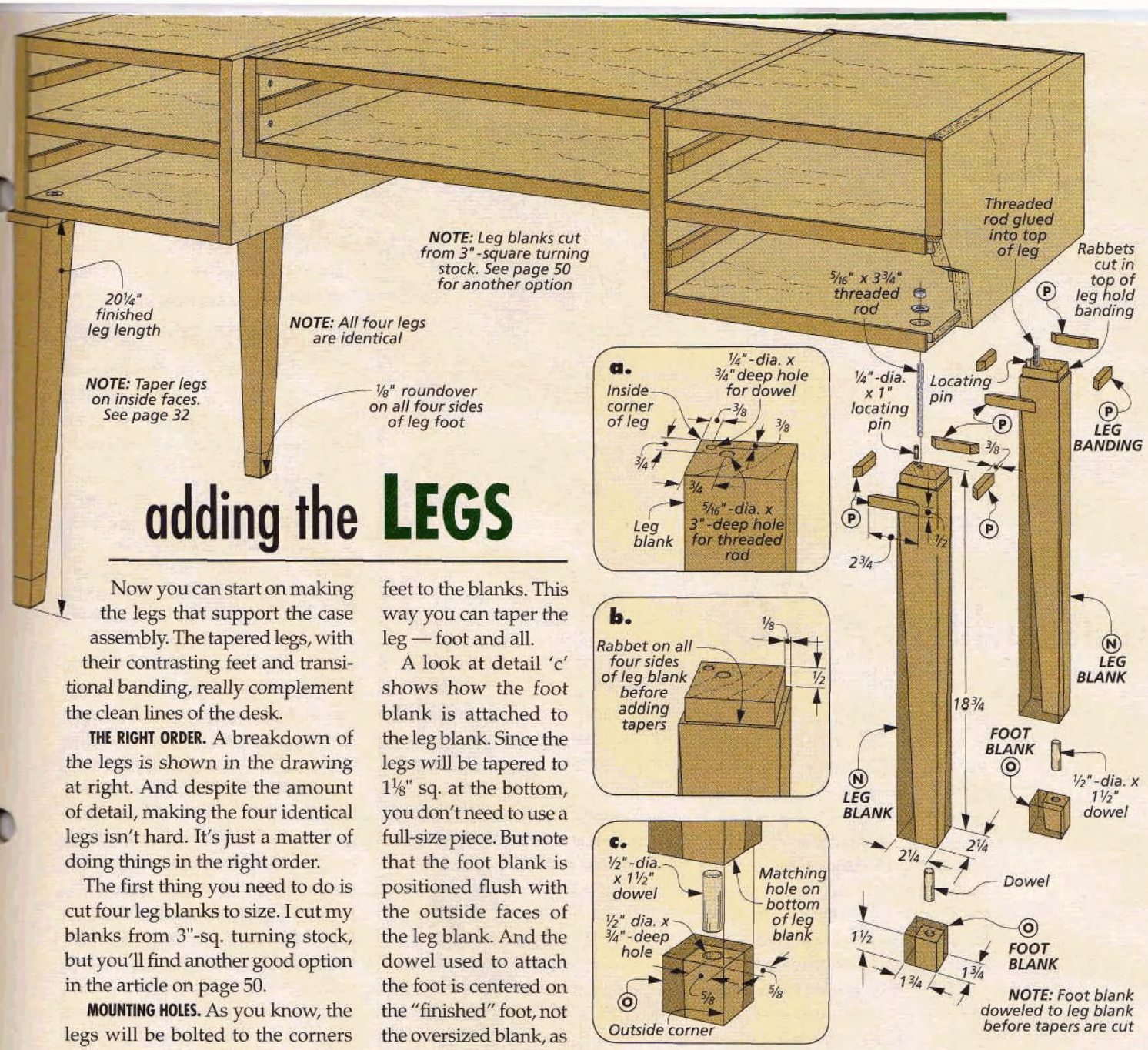

adding the LEGS

Now you can start on making the legs that support the case assembly. The tapered legs, with their contrasting feet and transitional banding, really complement the clean lines of the desk.

THE RIGHT ORDER. A breakdown of the legs is shown in the drawing at right. And despite the amount of detail, making the four identical legs isn't hard. It's just a matter of doing things in the right order.

The first thing you need to do is cut four leg blanks to size. I cut my blanks from 3"-sq. turning stock, but you'll find another good option in the article on page 50.

MOUNTING HOLES. As you know, the legs will be bolted to the corners of the case assembly. To do this, I glued (with epoxy) a section of threaded rod into the end of each leg. And a dowel locating pin helps position the leg (detail 'a'). So drilling two holes on the inside corner of each blank is the next job.

The key is drilling these holes accurately. If you own a doweling jig, this is a good job for it. Or, you'll find another method on page 32.

RABBETS. With the holes completed, I took the legs back to the table saw. Here, I used a dado blade to cut shallow rabbets around the top of each blank that will hold the contrasting banding (detail 'b').

THE FEET. Now you can turn your attention to the lower end of the legs. Before cutting the two-sided tapers, you'll want to attach the feet to the blanks. This way you can taper the leg — foot and all.

A look at detail 'c' shows how the foot blank is attached to the leg blank. Since the legs will be tapered to 1⅛" sq. at the bottom, you don't need to use a full-size piece. But note that the foot blank is positioned flush with the outside faces of the leg blank. And the dowel used to attach the foot is centered on the "finished" foot, not the oversized blank, as you can see in detail 'c.'

THE TAPERS. Once the feet are glued onto the legs, you can cut tapers on the two inside faces, as shown in the photo at right. You'll find more details on this on page 32.

ADD THE BANDING. The last item is the cherry banding. Fitting these pieces just takes patience. I simply cut a couple of extra-long pieces to size, and then mitered individual pieces to fit (drawing above). Glue and clamps will complete the job.

ASSEMBLY. Now the legs can be installed. First, you'll need to glue the threaded rods and the positioning pins in place. Then turn the case upside down, position one leg, add a washer and tighten down the nut. Add the other three legs, and the desk can stand on its own.

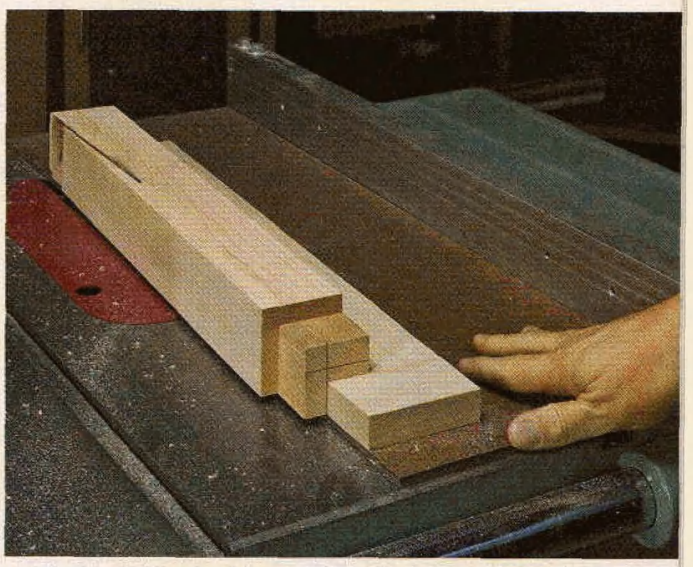

▲ The two, tapered faces of each leg can be cut quickly and accurately on the table saw with the help of a simple sled. See page 32 for details.

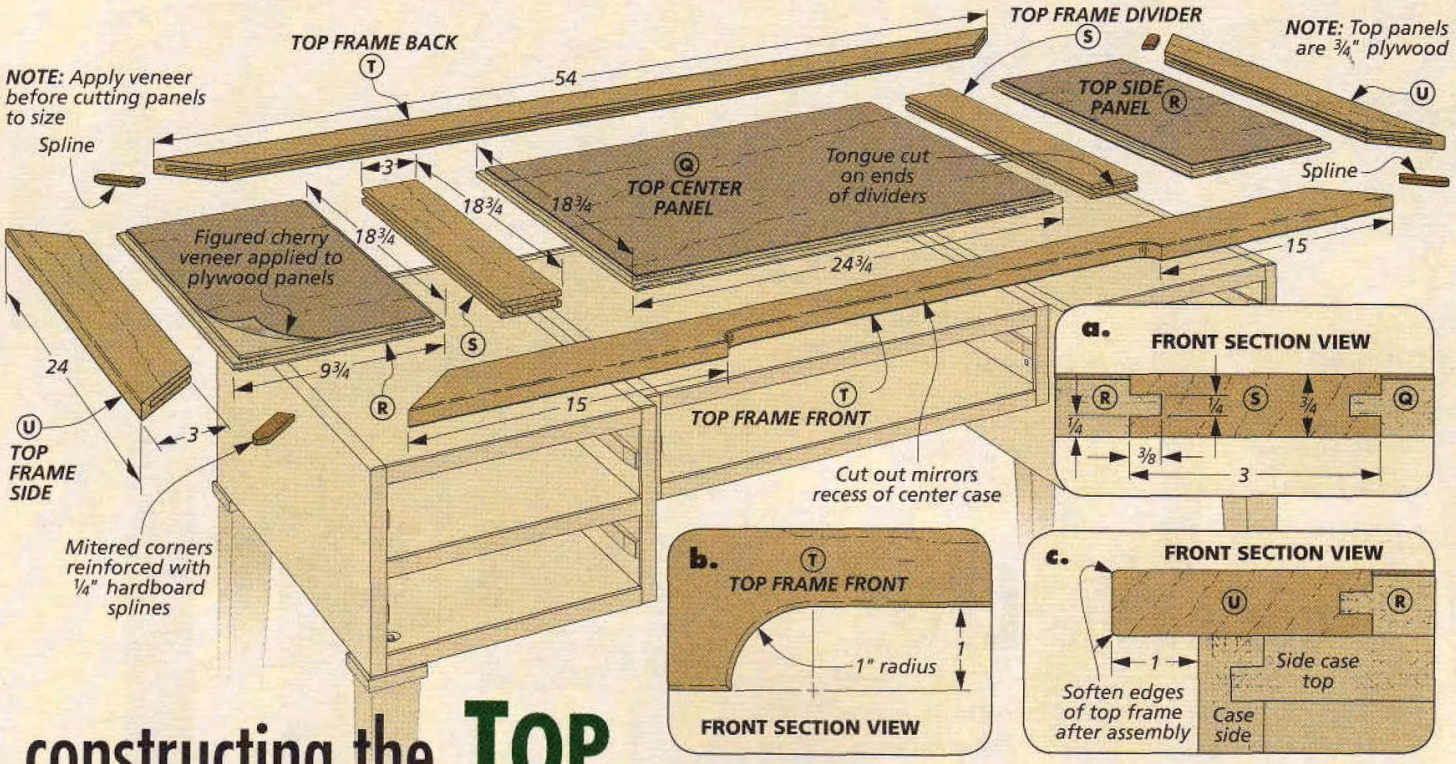

constructing the TOP

With the legs in place, the next step is to make and install the frame and panel top. It's sure to be a focal point of the desk, so the advice I gave myself before starting was to take it slow and easy.

A QUICK LOOK. Take a look at the drawing above and you'll see how the desktop is assembled. The center is made up of three veneered panels separated by two hardwood dividers. This is all captured by a mitered hardwood frame. And everything is solidly constructed using tongue and groove and spline joinery.

THREE PANELS. The easiest way to build the top is to work from the inside out. So the first task is to make the three center panels.

I started making the panels by cutting three slightly oversize pieces of ¾" plywood. Next, I applied the figured cherry veneer I had picked out. And once the veneering is done, the panels can be cut to final size.

Now the joinery starts. As mentioned and shown in details 'a' and 'c,' the frame parts are joined to the panels with a tongue and groove. This means the next step is to cut a centered tongue on all four sides of each panel. The left drawing in the box below gives you the idea.

THE FRAME. Cutting the tongues completes work on the panels. So you can temporarily set them aside and start on the frame that holds them. First, you'll need to cut the frame pieces to final width and rough length from stock that matches the thickness of the veneered panels.

MATCHING GROOVES. Next comes the other half of your tongue and groove joints. All of the frame pieces need centered grooves to match the tongues you cut on the edges of the panels. This job will keep you at the table saw, as shown in the box below. Before getting started though, make a note that the outside border pieces have a groove on only one edge, while the dividers have two grooves (details 'a' and 'c').

DIVIDER TONGUES. After completing the grooves, I set the outer frame

How-To: Tongue & Groove Joinery

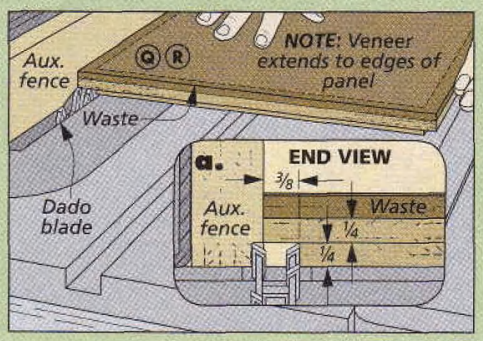

Panel Tongues. *A dado blade buried in an auxiliary rip fence provides a quick, accurate way to cut centered tongues on the panels.*

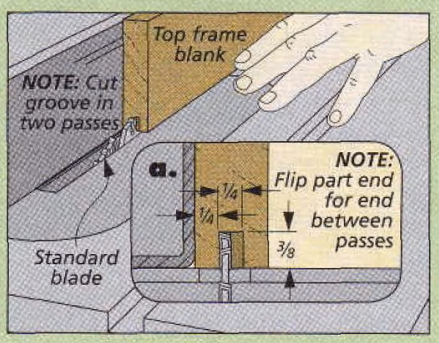

Frame Grooves. *The centered grooves can be cut by flipping the workpiece end-for-end between passes.*

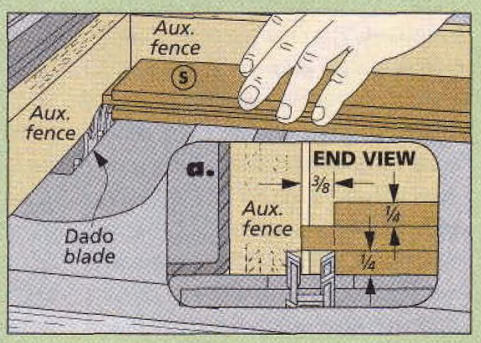

Divider Tongues. *The two dividers need a tongue cut on each end sized to fit the grooves in outer frame pieces.*

pieces on the bench and set up to cut the two dividers to final length. The length of these pieces allows for a tongue on each end. So once the dividers were sized, I switched back to a dado blade to complete this detail (see the box on opposite page). The key is to make sure that the shoulder-to-shoulder length of the dividers exactly matches that of the top panels they'll be glued to.

PARTIAL ASSEMBLY. The joinery on the center section of the top is done and these parts are ready to assemble. So before fitting the border, I glued the three panels and two dividers into one assembly, using the long border pieces to keep everything aligned. This makes it easier to accomplish the next step — accurately fitting the mitered frame pieces.

THE MITERED FRAME. From here on out, the box at right shows how things are going to proceed. I started fitting the frame by mitering the long front and back pieces to length. The goal is to match the inside length of these pieces to the shoulder-to-shoulder length of the panel assembly. With this done, you can dry clamp these two pieces in place and then carefully fit the short end pieces between them (Figure 1).

SPLINES. With the miters fit to your satisfaction, you can take the frame pieces to the router table. Here I used a slot cutter to cut stopped spline grooves in the mitered faces, as shown in Figure 2.

FRONT CUTOUT. Now, before gluing the frame in place, there's one more thing to do. The front piece has a cutout that mirrors the setback of the center case. Figures 3 and 4 give you guidance on adding this simple detail to the border.

FINAL ASSEMBLY. After smoothing the completed cutout, you can start gluing the border pieces in place one at a time, adding a hardboard spline to each miter joint.

INSTALLATION. When the glue was dry and the clamps put away, I spent a little time sanding both sides of the top before installing it on the desk. The top is simply glued down to the case assembly with an even overhang (referenced off of the end cases) on all four sides.

The veneered frame and panel top complements the lines of the desk.

How-To: Fit the Mitered Frame

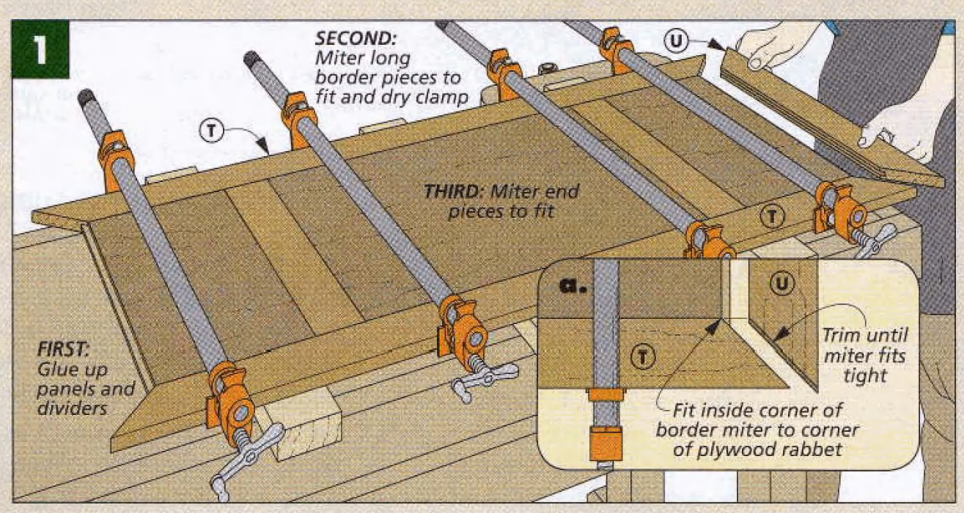

Long Pieces First, Then Short. *It's easier to first miter the two long frame pieces to fit the assembly, then complete the border by carefully tweaking the fit of the shorter end pieces.*

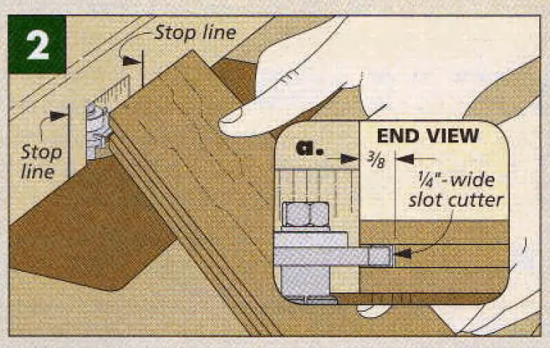

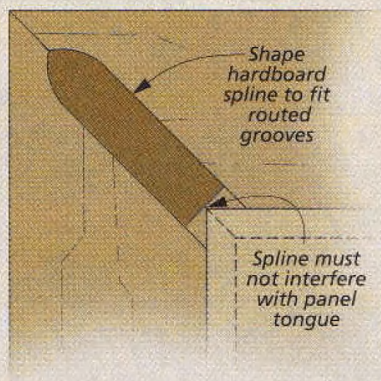

Spline Grooves. *To make sure the stopped spline grooves in the mitered faces align, cut them with the top surface of all the border pieces facing up.*

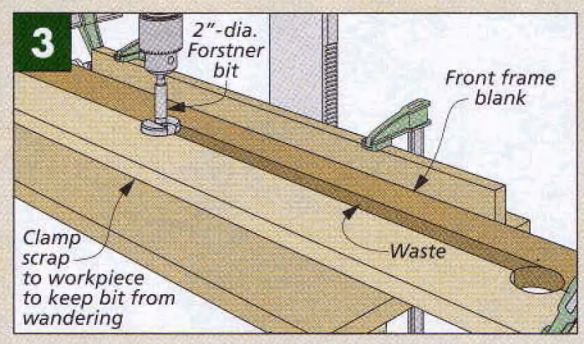

Cutout, Step One. *I started the cutout in the front frame piece by using a Forstner bit in the drill press to to create a 1" radius at either end.*

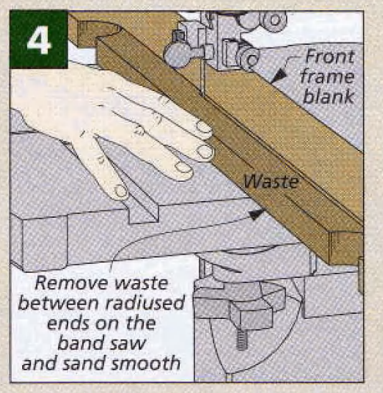

Complete the Cutout. *Next, use the band saw to remove the waste between the radiused ends.*

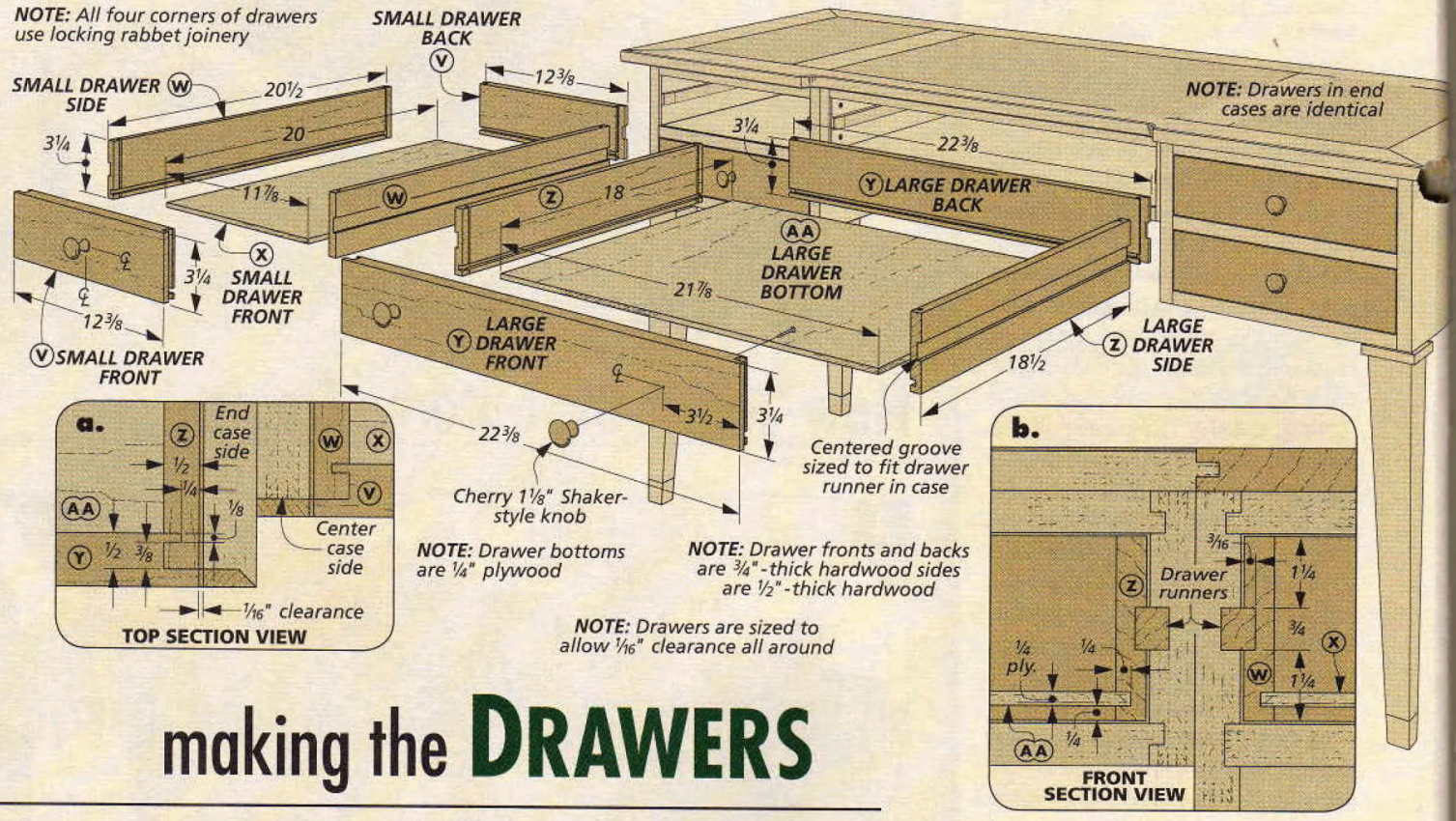

making the DRAWERS

After completing the top, you're probably ready for something a little less taxing. Building drawers for the case will fit the bill. And finally, to wrap up the construction on the desk, you can build a pencil tray to fit the center drawer.

THE BASICS. There are five drawers to build, but the four that fill the two end cases are identical. And all of the drawers use the same joinery at the front and back. This keeps things moving quickly.

The drawing above shows all the construction details you'll need. You'll want to note that the fronts and backs are cut from ¾"-thick stock, while the sides are only ½" thick. I sized the drawers to leave a 1/16" gap around all four sides. The side-mount runners will keep the drawers centered.

After cutting the parts to size, I stayed at the table saw and started work on the locking rabbet joinery, shown in detail 'a.' As mentioned, this joint is used at both the front and back. And when you're satisfied with the fit of the joints, you can complete the basic work by cutting a groove on the inside edge of each piece for the plywood bottoms.

THE SIDE GROOVES. Before gluing the the drawers together, you'll need to cut the centered grooves in the sides that will mate with the runners in the cases. The key here is to size and position these grooves so that the drawers will fit their openings properly and slide easily. I used a couple of test pieces to get this right.

After the drawers are assembled, you can complete the grooves through the backs of the drawers. The box at left gives you a few more details on doing these tasks.

Finally, I added some cherry, Shaker-style knobs to the drawers. These add a nice contrast as well as complementing the cherry accents on the legs and top.

A PENCIL TRAY

The last task is to put together a small pencil tray/organizer to fit into the front of the center drawer. The drawing at the top of the opposite page shows how the tray goes together. And the box at the far right gives you some pointers on the work involved.

A TROUGH. I started the tray by routing a smooth, rounded trough from a solid-wood blank at the router

How-To: Dado

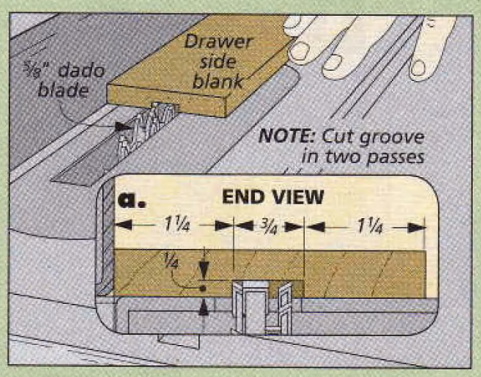

Centered Grooves. *I cut the grooves in the sides with two passes over a dado blade, flipping the piece end-for-end in between.*

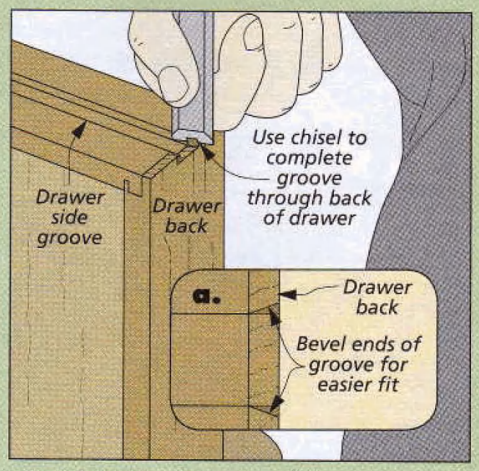

Complete the Grooves. *After assembling the drawers, remove the waste on the back to complete the job.*

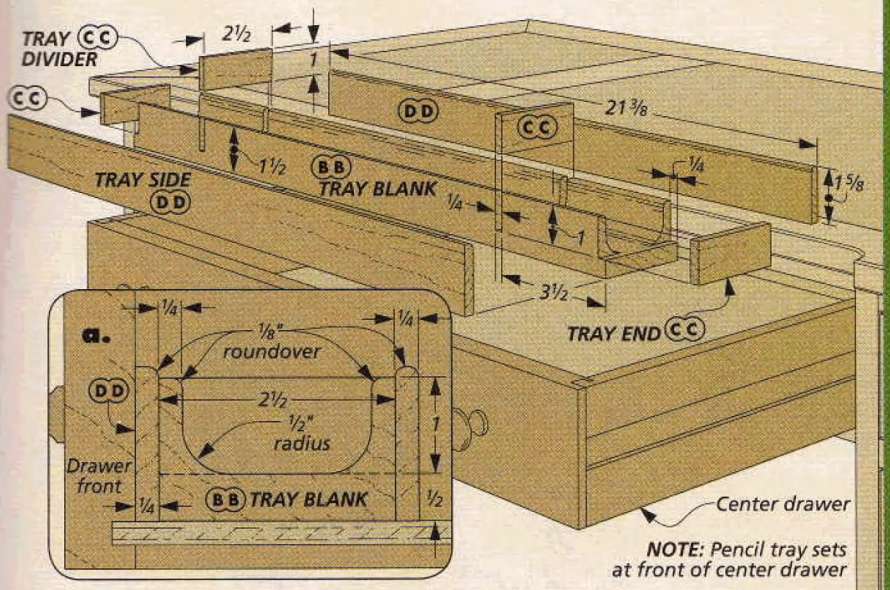

table. (I saved time by roughing it out with a dado blade first.)

Next, I "let in" the two ends and two dividers by cutting slots across the trough with a narrow dado blade on the table saw. The dividers and ends can then be cut to size and glued in place. The final step is to cut to size and glue on a pair of thin side pieces that hide the exposed ends of the slots.

FINISH UP. Now this project is ready for finish. I started with a coat of wiping varnish to give the wood a richer color. And this was followed with two coats of quick-drying, water-based finish. Then it's moving time for your new desk. W

How-To: Pencil Tray

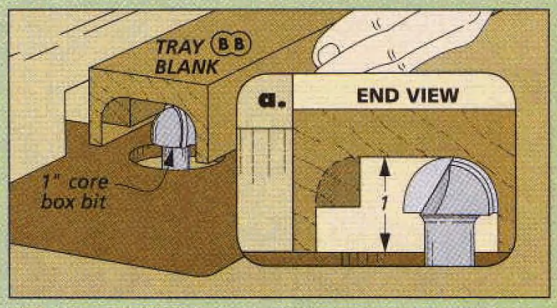

Routing A Trough. *I used a core box bit in the router table to rout a smooth, rounded trough.*

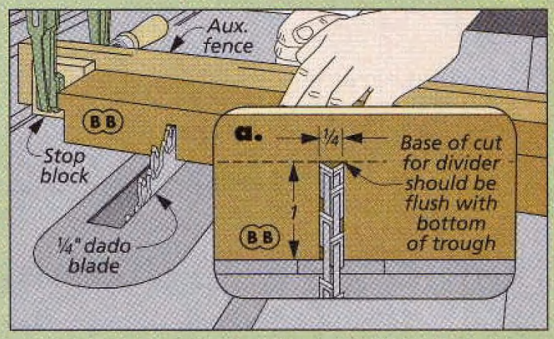

Divider Slots. *Next, I cut four, narrow slots across the tray blank to hold the dividers and end caps.*

Materials, Supplies & Cutting Diagram

A	End Case Sides (4)	¾ ply. - 22 x 9
B	End Case Tops/Btms. (4)	¾ ply. - 21 x 13
C	End Case Dividers (2)	¾ ply. - 21 x 13
D	End Case Dwr. Runners (8)	¾ x 9/16 - 21
E	End Case Back Pnls. (2)	¾ ply. - 13 x 9
F	Ctr. Case Sides (2)	¾ ply. - 19½ x 4⅞
G	Ctr. Case Top/Btm. (2)	¾ ply. - 19 x 23
H	Ctr. Case Dwr. Runners (2)	¾ x 9/16 - 19
I	Ctr. Case Back Pnl. (1)	¾ ply. - 23 x 4⅞
J	End Case Vert. Edg. (8)	¼ x ¾ - 9
K	End Case Horiz. Edg. (10)	¼ x ¾ - 12½
L	Ctr. Case Vert. Edg. (4)	¼ x ¾ - 4⅞
M	Ctr. Case Horiz. Edg. (4)	¼ x ¾ - 22½
N	Leg Blanks (4)	2¼ x 2¼ - 18¾
O	Feet Blanks (4)	1¾ x 1¾ - 1½
P	Leg Banding (16)	⅜ x ½ - 2¾
Q	Top Ctr. Panel (1)	¾ ply. - 18¾ x 24¾
R	Top Side Panels (2)	¾ ply. - 18¾ x 9¾
S	Top Frame Dividers (2)	¾ x 3 - 18¾
T	Top Frame Fronts/Backs (2)	¾ x 3 - 54
U	Top Frame Sides (2)	¾ x 3 - 24
V	Sm. Dwr. Front/Back (8)	¾ x 3¼ - 12⅜
W	Sm. Dwr. Sides (8)	½ x 3¼ - 20½
X	Sm. Dwr. Btm. (4)	¼ ply. - 20 x 11⅞
Y	Lg. Dwr. Fronts/Backs (2)	¾ x 3¼ - 22⅜
Z	Lg. Dwr. Sides (2)	½ x 3¼ - 18½
AA	Lg. Dwr. Btm. (1)	¼ ply. - 18 x 21⅞
BB	Tray Blank (1)	1½ x 2½ - 21⅜
CC	Tray Dividers/Ends (4)	¼ x 1 - 2½
DD	Tray Sides (2)	¼ x 1⅝ - 21⅜

- (6) 1⅛"-dia. Shaker-Style Knobs
- (1) Figured Cherry Veneer (8 Sq. Ft.)
- (1) 5/16" x 16" Threaded Rod
- (4) 5/16" Flat Washers
- (4) 5/16" Lock Nuts
- (14) #8 x 1¼" Fh Woodscrews

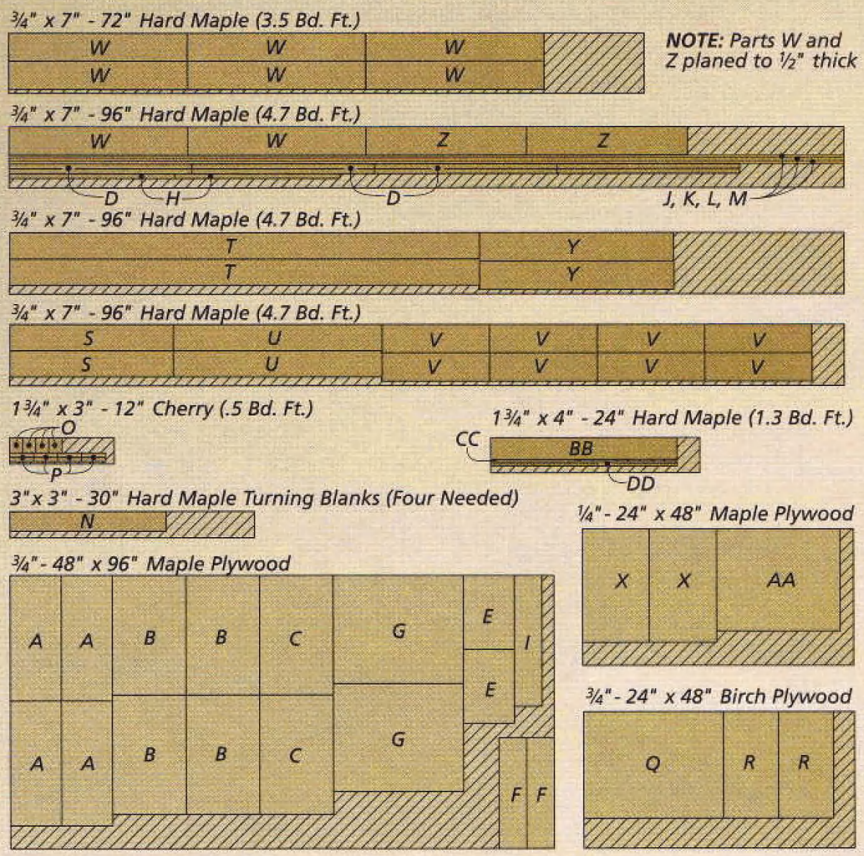

5 simple shop accessory Organizers

Get a handle on difficult-to-store small items in your shop with these easy-to-build storage solutions.

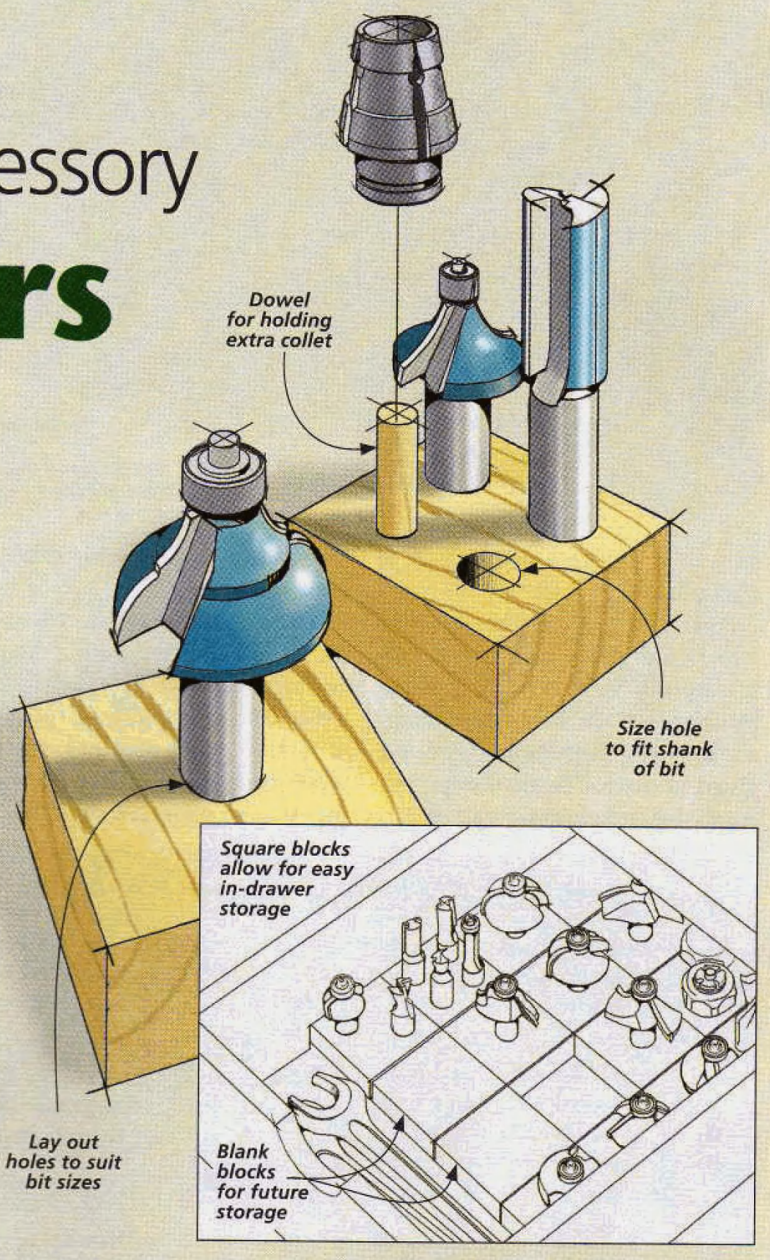

1 Router Bit Organizer

It doesn't take long to acquire quite a few router bits. And as you do, it becomes difficult to store them in a way that protects the cutting edges. To solve this problem, I built the modular system shown in the drawing at right to organize all my router bits neatly in a drawer.

The system is nothing more than several 2"-square hardwood blocks that hold the bits. Just drill a single center shank hole in each block to hold larger bits or make a number of holes for smaller bits. You can even mount a dowel in the block to hold an extra router collet.

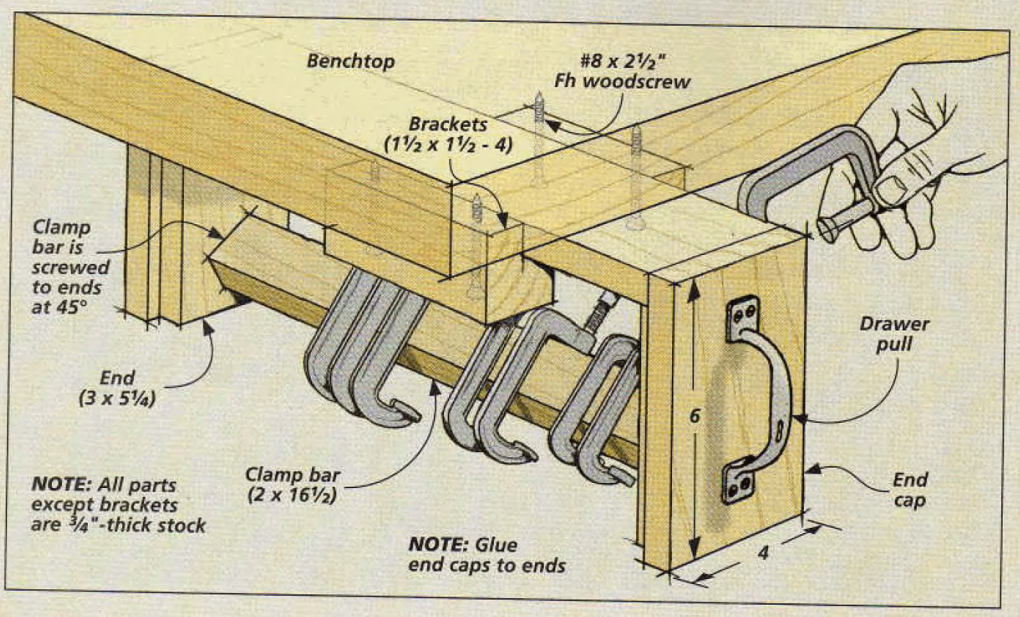

2 C-Clamp Storage

Small C-clamps are handy for many shop tasks. And I have a drawer full of them. The trouble is keeping them organized so I can find the right size quickly.

An easy way to store them without taking up a lot of space is the pullout rack shown at left.

The rack is simply a U-shaped frame that holds an angled bar for the clamps to rest upon. It's mounted to the underside of the workbench with a pair of L-shaped brackets. The brackets are positioned to act as a stop, keeping the end cap flush with the front of your workbench.

3 Drill Press Storage

I use my drill press for a lot more than drilling holes. To keep the various accessories in one place, I built the storage rack shown in the drawing at right.

The rack is simply a piece of plywood that's beveled at 45° along both edges. Triangular-shaped legs attached to the back add stability and allow the rack to sit on a shelf.

Holes and dowels added to the face of the rack keep all my sanding attachments, chuck keys, and other accessories in plain sight and readily available whenever I need them.

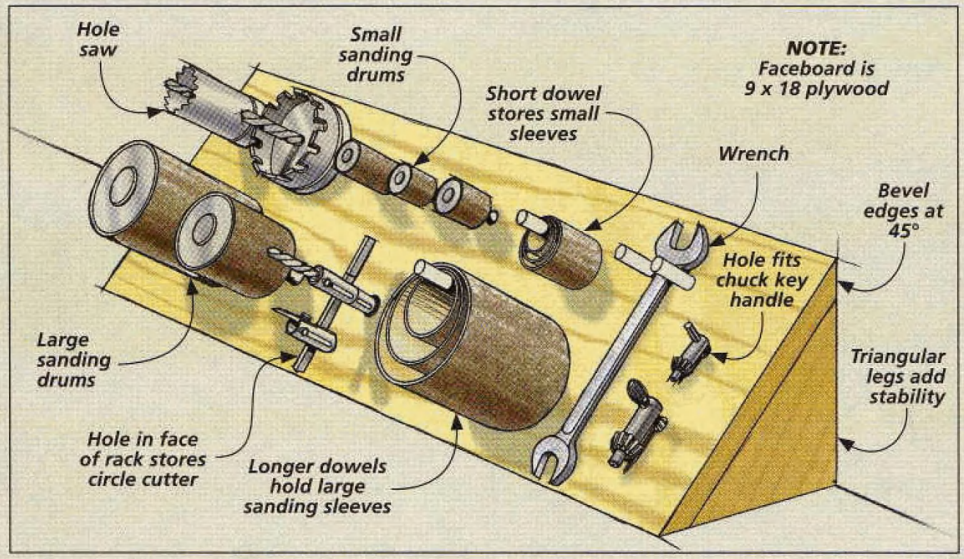

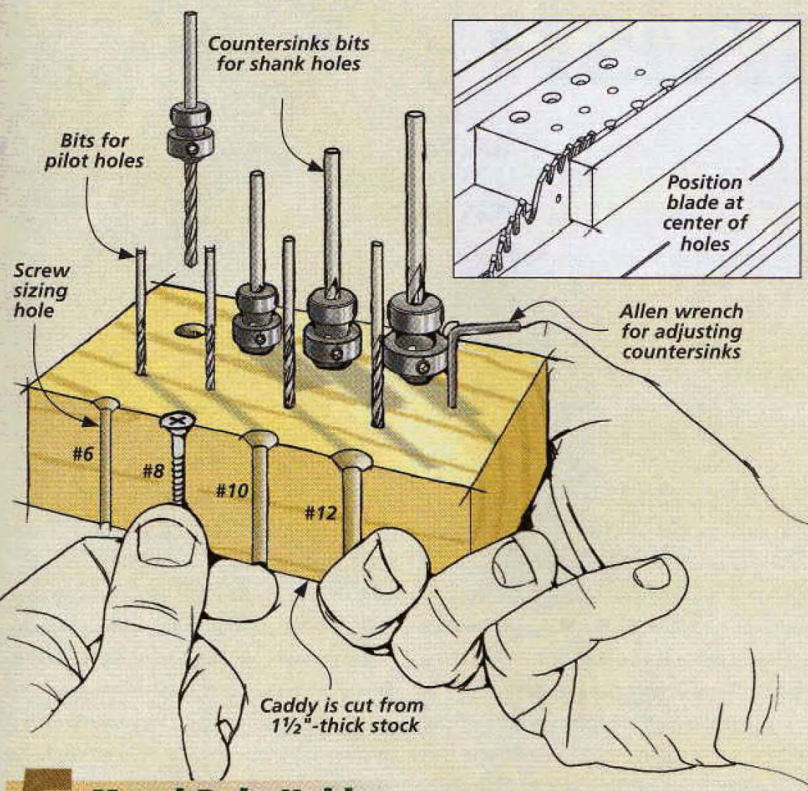

4 Countersink Caddy

Drilling holes for woodscrews usually requires the use of a couple of different-sized bits. I use a smaller bit for the pilot hole. And then I use another size of bit with a countersink for the shank hole. The trouble is trying to remember which bit goes with which screw.

To solve this problem, I built the countersink caddy you see in the drawing at left. The caddy is portable and has several holes for storing different sized bits with countersinks (#6, #8, #10, and #12), corresponding pilot bits, and an Allen wrench.

I drilled an additional row of countersunk holes along the front. Then I ripped away the front edge so I could tell at a glance which bit to use for each screw size.

5 Metal Rule Holder

I have several metal rules I use regularly around the shop. But it seems I can never find one when I need it. So I built the rack shown in the drawing at right to store the rules and keep them accessible.

The holder is just a few wood blocks with a series of kerfs cut at an angle to hold the rules. The thickness of the block and depth of the kerfs can be varied to allow rules of different widths to be stored.

To mount the blocks, all you need to do is screw them to the wall with the kerfs facing up to keep the rules from falling out. W

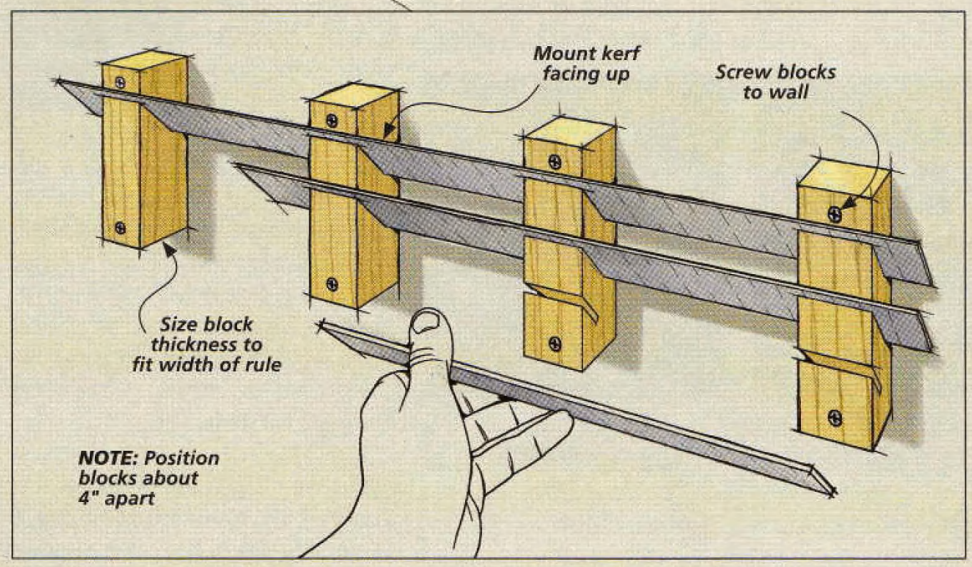

tips & techniques for a perfect

Aerosol Finish

Whether it's lacquer, polyurethane, or paint, you can get a great-looking finish on your projects by learning some simple spray techniques.

Spray finishing is a great way to apply a smooth finish on a project. But conventional spray equipment can be expensive. Fortunately, aerosol spray finishes provide a low-cost alternative. And by using a few simple techniques, you can get a professional finish that rivals any applied with an expensive spray gun and air compressor.

PREPARATION IS KEY. The foundation for any good finish is preparing the surface. For painted projects, this means filling all holes, cracks, and voids and sanding for a smooth surface. And while you're sanding, you can ease all the sharp corners. I also like to use a quality primer before spraying on a color finish coat. (See Shop Tips on the opposite page.) For projects that are clear-coated, I just make sure they're sanded smooth and wiped clean before I spray on the finish.

SHAKE IT UP. Good flow from the can is critical to getting an even coat. That's because most aerosol finishes are thinned with solvent. And since spray paints get their color from powdered pigment, the pigment can settle out of the thin mixture. Even clear coatings (like satin, semi-gloss polyurethane, or acrylic) use a dry, silica "flattener" to reduce the gloss of the finish.

So it's important to shake the can thoroughly before you start. Most cans will have a metal ball inside to help mix the contents. If the can has been sitting for a while, I like to shake it for two or three minutes. And you should shake it every couple of minutes during use to keep the pigment dispersed.

TAKE IT LIGHTLY. With most aerosol finishes, it's better to apply several light coats than one or two heavy coats. You can avoid runs and sags by doing this and you'll get a smoother finish in the end.

I like to wait at least ten minutes or so between coats, but that can depend on the type of material you're spraying. The instructions on the can will help you determine the best time to recoat.

If you need to sand between coats, wait until the finish is completely dry. Then sand with 400-grit sandpaper to get rid of dust nibs and level out the surface. At that point, you can spray on another coat.

OVERSHOOT. Spraying the paint on also presents challenges. When I first picked up a spray can, I had a lot of trouble getting an even finish. I would get a thick build-up near the edges of my project. And that caused sagging and runs, like you see in the first photo at left.

The solution is to "overshoot" the edges. As you spray across the

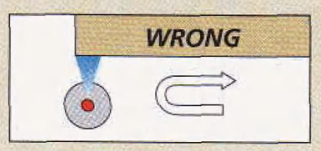

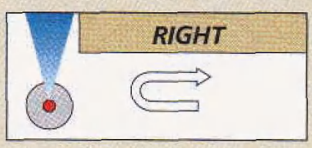

◄ When spraying, the tendency is to stop at the edge of the project and reverse direction (left example). But to avoid runs, continue the stroke completely past the edge, then reverse direction (right example).

surface, continue the motion until you're well past the edge. This way, you'll end up with a consistent coating from edge to edge, as shown in the second photo (opposite page).

PROPER DISTANCE. Another tip that will help you get a consistent finish is paying attention to the distance you hold the can from the object you're spraying. The instructions on the can will give you some guidelines. Generally, it's in the 12" to 16" range. Sometimes I'll use a ruler to help me gauge the right distance. This will give you the optimum coverage.

WATCH YOUR SPEED. When using an aerosol finish, how fast you move the can while spraying can make a big difference. If you move too slow, you can deposit a lot of finish in a hurry. And that can lead to sags and runs. The problem is, the sags won't appear until the coating has had a chance to "flow out" for a few minutes. Then it's too late to do anything about it. And if you spray too fast, you can end up with poor coverage and a rough, "dry" finish (photos below).

With each type of finish, there seems to be an optimum speed. That's why I like to practice on scrap pieces before spraying my project.

STAY PARALLEL. The spray pattern from an aerosol can is cone-shaped. So it's important to keep the base of that cone facing parallel to the surface of your project (see drawing at right). Otherwise, you'll end up with an inconsistent finish — thinner in some spots, thicker in others. You want to practice and work at keeping your wrist and the spray can straight while moving your arm side-to-side as you spray. One thing that helps with this is the spray trigger attachment shown below.

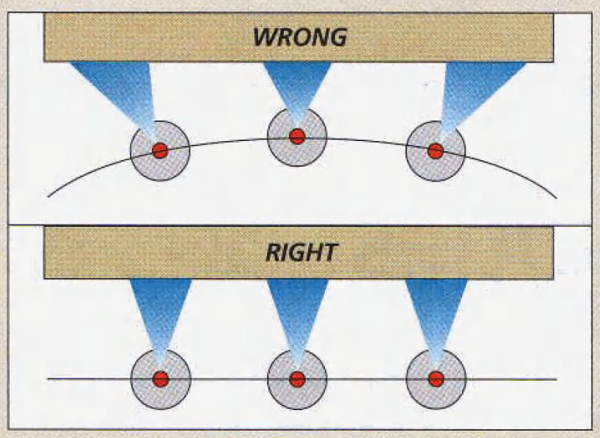

Parallel Strokes. *Keep your wrist straight and move your arm in a side-to-side motion to maintain a consistent spray pattern on your project.*

MORE OPTIONS. Suppliers are always adding new finishes to their lineup of aerosols. This gives you a lot of options to choose from. And with a little practice, you can take advantage of this to get a great-looking finish every time you spray. W

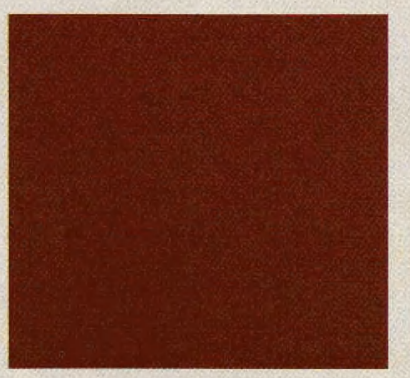

▲ Spraying too fast and from too far away creates a "dry" texture with poor coverage (left photo). But with consistent strokes at the proper distance, you'll get a great finish, as shown in the right photo.

▲ A spray trigger attachment takes the pressure off your finger and makes the task of spraying large projects less tiresome.

Shop Tips: Preparing for a Spray Finish

When using spray finishes, taking a little time on prep up front can save some headaches down the road.

FINISH BEFORE ASSEMBLY. On some projects, it makes sense to spray the parts before assembly. This way, it's easier to get a consistent finish. But you'll want to mask off any areas that will be glued (left photo).

PREP FOR PAINT. If you're painting the project, spend some extra time to get a smooth surface. That means using a filler and sanding it smooth. And I like to use a good-quality primer before the topcoat.

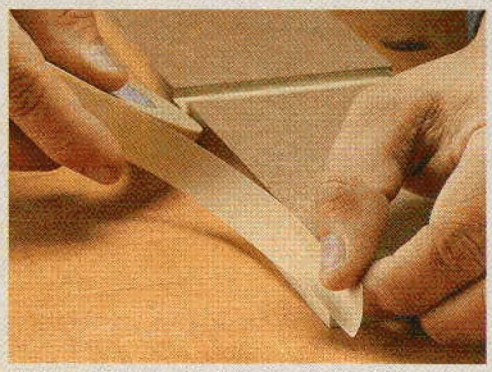

Mask Off Joints. *Wood glue won't adhere well to paint or varnish. So, before spraying a finish on project parts, mask off all areas of joinery that will be glued.*

Proper Prepping. *For painted projects, taking time to prepare the surface will pay off with a smoother finish. Fill all cracks and voids with putty or joint compound and sand smooth.*

Questions & Answers

Finding the Right Workbench Height

Q ***I want to build a new workbench for my shop. Is there a standard height I should use?***

Annabelle Grace
Columbus, Ohio

A There's no single answer to that question, but workbenches generally range in height from about 32" to 36". The trick is finding the right height for *you*.

For example, if you're 6' tall or taller, you may find a 34"-high bench too low. But if you're only 5'4", it may be too high to be comfortable. You need to find the right height so that you aren't straining after a few hours.

So, how do you find the right bench height? If you don't already have a workbench to use as a reference, you can set up a temporary bench with a couple of sawhorses and some plywood. Or you could use your table saw as a reference. Work with it for a while. Is it at a comfortable height? Do you find yourself hunched over a lot? The answers to these questions will give you a good starting point.

TASK-ORIENTED. The tasks you'll be doing at the bench play an important role, too. You may find that when using hand tools, you like the bench height a little lower to give you more leverage, as you see in the left drawing. And perhaps you'd like it a little higher when using a sander or router, as shown in the right drawing.

A low bench for hand tool work gives you more leverage (left). And a taller bench provides better visibility with power tools (right).

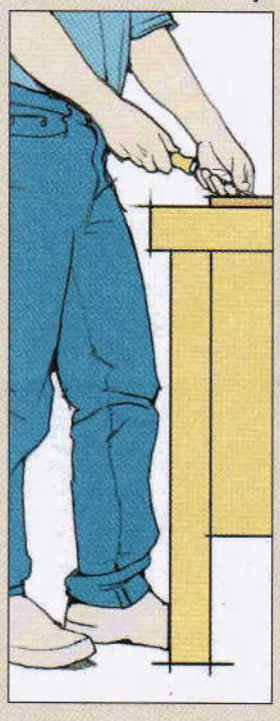

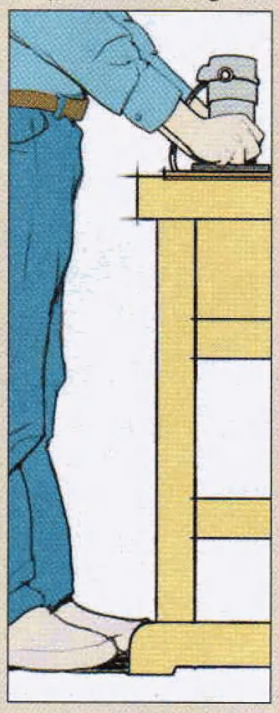

You can also "raise" or "lower" a bench to get some ideas on what feels right to you.

RAISE THE BENCH. To find out if the workbench you're using is too low, place some spacer blocks under the legs to raise the height (left photo above). Or, add some plywood to the top. Try experimenting with different heights.

LOWER THE BENCH. Now, it doesn't make much sense to go cutting the legs off a bench. But you can essentially "lower" the benchtop by standing on a platform. I use some ¾" plywood and place it in front of the bench to stand on, (right photo above). And you can try different thicknesses to hone in on the right height.

TEMPORARY SOLUTIONS. Even if you have a permanent bench to use, you can put the above solutions into practice for special tasks. For example, when I'm using a dovetail jig, I like to have the router high enough so I can see what's going on. So, I'll use an auxiliary platform on the benchtop to raise the working height.

SMALL SHOP. Another factor to consider is the height of other worksurfaces. You might want to use your bench as an outfeed table for your table saw. If that's the case, the bench height is dictated by your saw's height.

Deciding on the best bench height requires a little experimenting but pays off in the end. W

Do you have any questions for us?

If you have a question related to woodworking techniques, tools, finishing, hardware, or accessories, we'd like to hear from you.

Just write down your question and mail it to us: Woodsmith Q&A, 2200 Grand Avenue, Des Moines, Iowa 50312. Or you can email us the question at: woodsmith@woodsmith.com.

Please include your full name, address, and daytime telephone number in case we have questions.

Sources

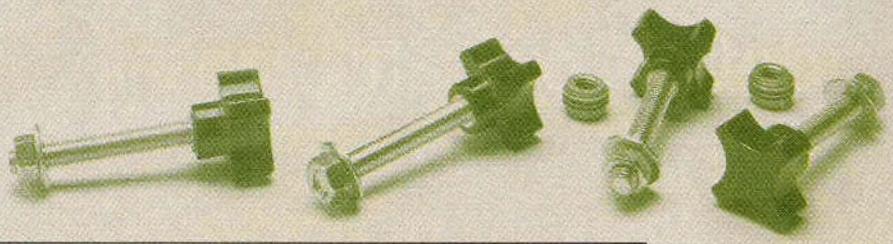

GLUE LINE RIP BLADES

When ripping solid wood on the table saw, a glue line rip blade can make a big difference. The *Freud* glue line rip blade (LM74R010) is available from the *Woodsmith Store*. Most other blade manufacturers also offer glue line rip blades. See margin for sources.

ROUNDOVER BITS

With a roundover bit in your router, you can make a variety of edge profiles, as shown on page 10. The *Ultra-Glide* bearing on the *Amana* corner rounding bit makes smooth, half-round profiles. The bit shown on page 11 (*Amana* 57190) includes the radius bearing. You'll also need to use a regular bearing (47718) to make the first pass (see margin).

VACUUM PRESS

Nothing beats a vacuum press for veneering and laminating. It's a great way to apply consistent pressure across the surface of a workpiece during a glue-up. A *Thin Air Press* kit, like that shown on page 14, is available from *Woodcraft* (145951), *Rockler* (28777 and 20691), and *Roarockit Skateboard Company* (01300 and 01301). You can also order replacement bags and accessories from these sources.

ROUTED BOWLS

With a router, templates, and the right bit, you can make a variety of bowls (page16). I used a ½" shank, 1¼"-dia. bowl and tray bit with top bearing made by *CMT*. I ordered mine from *Woodcraft* (823066). You can also purchase this bit from *Mike's Tools* using the *CMT* part number (851.502.11B).

You'll also need a collet extension for your router. You can get this from *Mike's Tools* as well (*CMT* part number 796.001.00).

For a smooth surface on the inside of the bowls, I used the 3"-dia. *Tim Skilton Premium Sanding Pad* (68Z25.32) from *Lee Valley*. You'll also need 180 and 220-grit *New Wave* sanding disks (68Z63.31), also from *Lee Valley*. Their unique, wavy edge conforms to the inside of the bowls without gouging.

MODULAR BOOKCASES

The bookcases on page 22 are a great way to add a lot of storage space to any room. For the open bookshelf units, I used ¼" walnut shelf supports from *Rockler* (33902). And I purchased the cabinet leveler brackets (01S04.01), leveler feet (01S06.02), ¼"-20 x 13mm threaded inserts (00N11.13), ¼"-20 x 30mm quick-connect bolts (00N16.30), and ¼"-20 x 50mm quick-connect bolts (00N16.50) from *Lee Valley*.

If you're adding drawers and doors, you'll need some additional hardware. The stem bumper glides for the drawers are from *Rockler* (28373). The rest of the hardware came from *Lee Valley*. This includes the bin pulls (02W30.28), mushroom knobs (02W30.24), antique brass no-mortise hinges (00H51.02), plastic retainer clips (00S07.02), magnetic catches (00S16.01), #4 x ½" Fh antique brass screws (01Z10.41), and #4 x ½" Ph antique brass screws (01Z20.41).

WRITING DESK

The hardware for the writing desk on page 34 can be purchased at any hardware store. The cherry, Shaker-style pegs I used for the drawer knobs came from *Rockler* (78469). And the figured cherry veneer for the top was ordered from *Certainly Wood*.

Online Customer Service

Click on *Manage My Account* at **www.woodsmith.com**

- Access your account status
- Change your mailing or email address
- Pay your bill
- Renew your subscription
- Tell us if you've missed an issue
- Find out if your payment has been received

MAIL ORDER SOURCES

Project supplies may be ordered from the following companies:

Woodsmith Store
800-444-7527
woodsmithstore.com
Rip Blades, Roundover Bits, Ultra-Glide Bearing

Rockler
800-279-4441
rockler.com
Roundover Bits, Vacuum Press Kits, Shelf Supports, Stem Bumper Glides, Cherry Knobs

Lee Valley
800-871-8158
leevalley.com
Rip Blades, Roundover Bits, Sanding Pad/Disks, Bookcase Hardware

Woodcraft
800-225-1153
woodcraft.com
Rip Blades, Roundover Bits, Vacuum Press Kits, Bowl and Tray Bit

Mike's Tools
714-558-8360
mikestools.com
Bowl and Tray Bit, Collet Extension

Certainly Wood
716-655-0206
certainlywood.com
Figured Cherry Veneer

Amana Tool
800-445-0077
amanatool.com
Roundover Bits, Ultra-Glide Bearing, Corner Rounding Bit

CMT
888-268-2487
cmtusa.com
Roundover Bits, Bowl and Tray Bit, Collet Extension

Freud
800-334-4107
freudtools.com
Rip Blades, Roundover Bits

Roarockit Skateboard Company
416-938-4588
roarockit.com
Vacuum Press Kits

Woodsmith®

HARDBOUND VOLUMES

This set includes six hardbound volumes of ***Woodsmith*** *(Volumes 22 through 27). Each volume includes a year of issues, plus a table of contents and a handy index.*
Buy them for $29.95 each. Or get the whole six-volume set for $139.50 and ***SAVE $40***
— that's like getting one volume FREE.
(Offer expires 12/31/07)

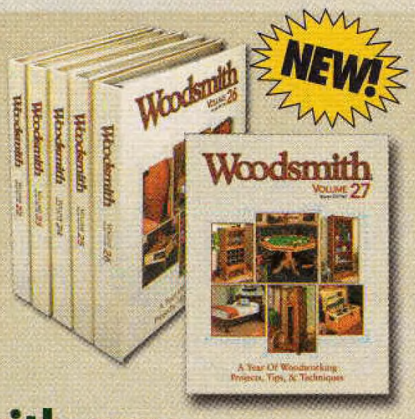

Go to www.Woodsmith.com
or Call 1-800-444-7527 Today to Order Yours!

going with the grain

Techniques for Making Legs

Take your table or desk to the next level. Here are two foolproof techniques to get outstanding legs without a lot of fuss.

The first thing I notice on a well-made table or desk (like the one on page 34) is the legs. Pleasing legs with straight, even grain really make a project stand out. But there's a little more to getting great-looking legs than just ripping a blank to size. It starts with grain and lumber selection.

WILD GRAIN. The problem you run into when cutting a leg from solid stock is drastic grain differences. Usually, what you'll get are two sides with straight, even grain. But often, the other two sides will have mismatched grain patterns.

This doesn't mean you have to settle for less than satisfactory legs. Thankfully, you have some options. I'll share two methods with you that give me reliable results every time.

TURNING BLANK

One leg-making technique is to simply cut the leg from a turning blank. You can find these solid wood blanks in many woodworking catalogs and from local hardwood lumber dealers.

These blanks are usually rough-sawn (upper photo at left). But all that matters is that you can see the growth rings on the end.

LAYOUT. Before you do any cutting, the first thing you need to do is lay out the leg on the end of the blank. And for this, I make a simple hardboard template, as shown in the margin. (I like to make the template about ⅛" larger than the final size of the leg to allow for cleanup.)

Laying out the shape of the leg is a simple matter of orienting the template to find the best grain pattern. What you're looking for here is to lay out the leg so the grain runs off the edge at 45° to 60° on each face, as in Step One on the facing page. In this orientation, the grain on the leg faces will be straight and clear.

MAKING THE CUTS. Since the blank is rough, I make the first two cuts over at the band saw. The main photo above and Step Two on the facing page shows the setup for making the first cut. After cleaning up the cut face on the jointer, you can repeat the process to cut an adjacent side.

Once you have two faces cut, cleaned up and square to each other, you can complete the process at the table saw (Step Three). This way, you won't need to do

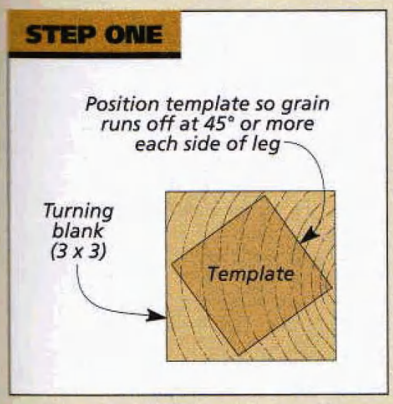

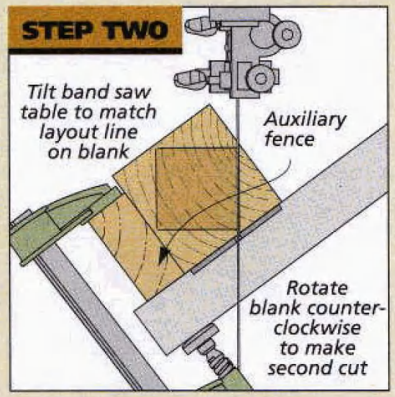

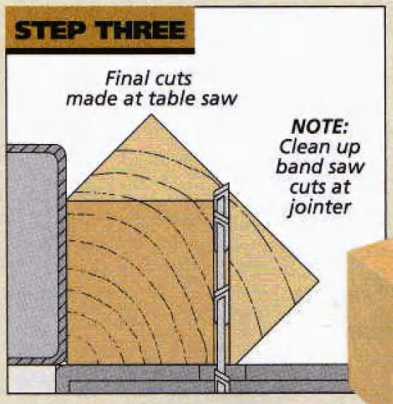

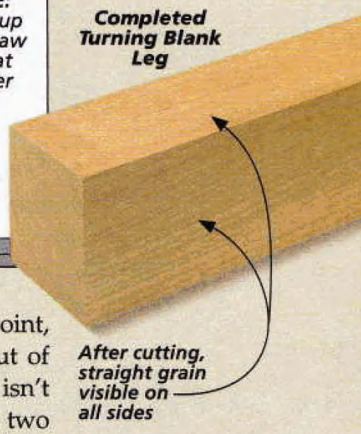

any further cleanup. That's really all there is to this technique.

Now if using a turning blank isn't possible or practical for you, there's another technique I use that's a little more economical. And all the cutting takes place on the table saw.

GLUED-UP BLANK

Instead of working with a solid rough blank, this method uses a glued-up blank (lower margin photo on the facing page). And just like the previous technique, the blank starts out oversize. This way, you can cut the leg to conceal the glue lines.

PREPARE THE BLANK. Now you can't just take any two pieces of wood and glue them together. You want to select stock to get straight grain on the leg. For more on wood selection, take a look at the box below.

In Step One below, you can see how the two pieces are arranged. By gluing the boards together in this orientation, the grain will be straight on all four sides of the leg.

Now, you're ready to lay out the shape of the leg. Here again, I like to use a template. After lining it up and tracing the profile, you can head over to the table saw.

CUTTING THE BLANK. At this point, you're ready to cut the leg out of the blank. But since the leg isn't square to the blank, the first two cuts will be bevel rips like you see in Step Two below.

Once two faces of the leg are exposed, you can reposition the fence and set the blade square to the table for the remaining cuts (Step Three). And what you are left with is a clean, straight-grained blank, as the margin photo at right shows.

No matter which technique you use, you can be sure the legs will stand out for the right reasons. W

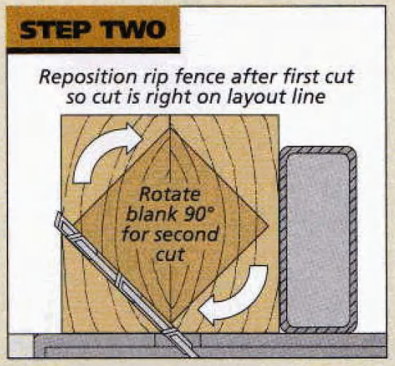

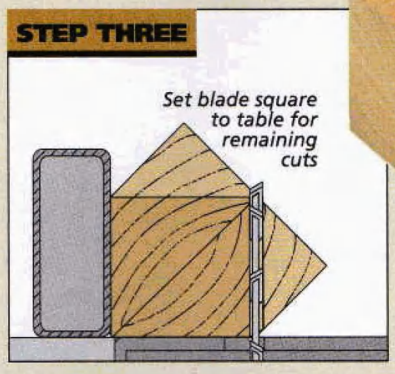

How-To: Choose the Right Grain

It can be tricky to select the right pieces of wood for table and desk legs. To get a pleasing, straight grain on all four sides, the best approach is to look at the end grain of the workpiece.

For thinner legs, the perfect board will be "riftsawn" (top). The grain runs at 45° to 60° to all the surfaces and results in even, straight grain. From the face, a "quartersawn" board (middle) seems like a good choice, but the edges will have wild, "cathedral" grain. For the glue-up technique shown above, "flatsawn" lumber (bottom) works best.

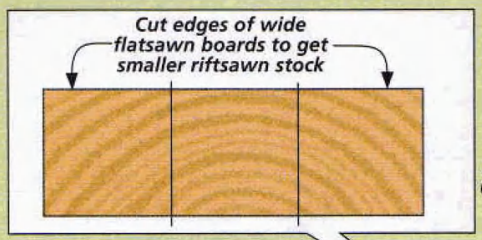

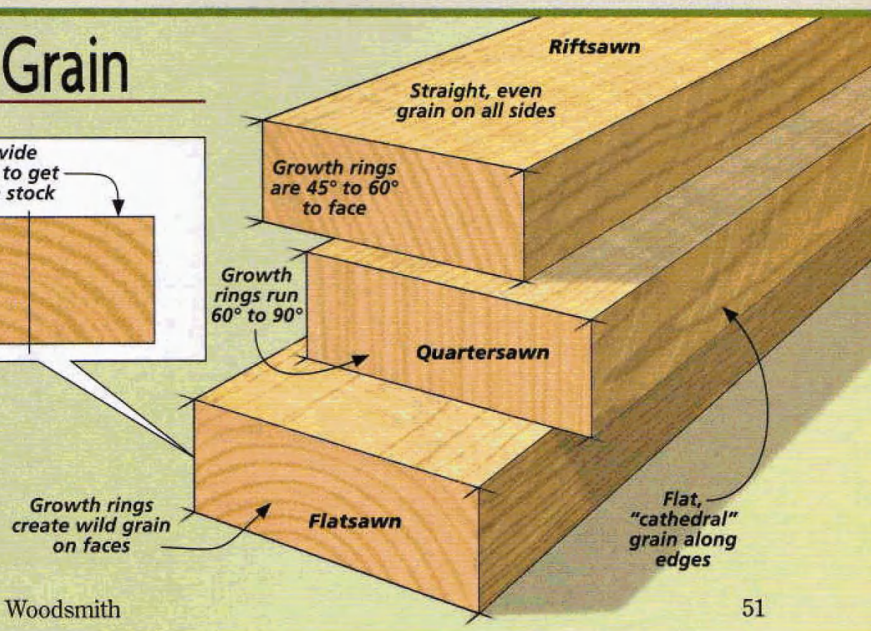

looking inside
Final Details

▲ *Five-Drawer Desk.* Simple lines and cherry wood accents give this desk a striking look. And the small size makes it a practical piece of furniture. But best of all are the new woodworking tricks you'll learn. Turn to page 34 for everything you'll need to build this unique project.

▼ *Routed Bowls.* You don't need a lathe to make beautiful bowls. All it takes is a router, a simple accessory, and a clever technique. We'll show you how on page 16.

Heirloom Bookcase. This versatile project gives you lots of options. Adding drawers and doors to a single unit turns it into a handsome storage cabinet or buffet. Or build two or more units to use as a bookcase. You'll find all the details starting on page 22. ►